Flash S30 2008	

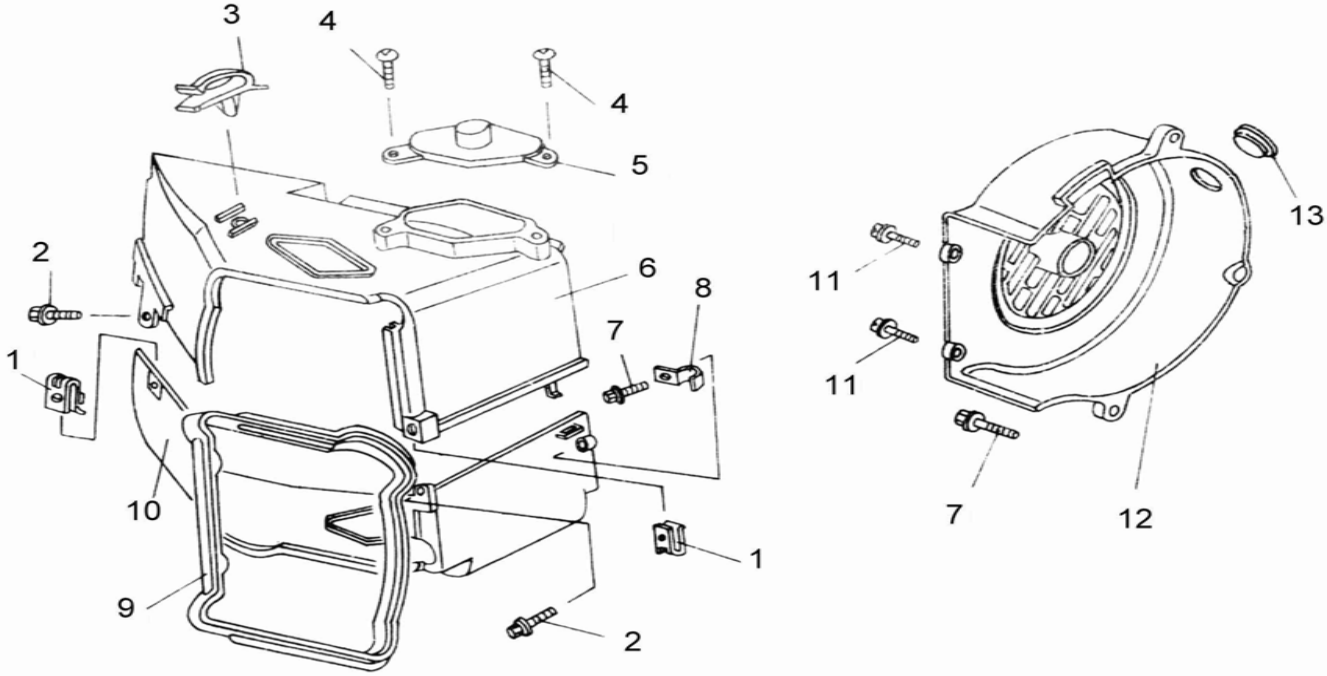
3
4
4
5
2
6
8
7
1
10
1
9
2
11
11
13
7
12

POS	QTY	PARTNUMBER	BESKRIVELSE	DESCRIPTION
1+10	1	403800	BLÆSEHUS NEDERST MED KLEMME	CLAMP - F1.1+10
2	2	403801	BOLT M6X16	BOLT M6X16 - F1.2
3-6	1	403802	BLÆSEHUS ØVERST	FANHOUSING UPPER F1.3-6
7	2	403803	BOLT M6X25	BOLT M6X25 - F1.7
8	1	403804	KLEMME	CLAMP F1.8
9	1	403805	GUMMI PAKNING	SEAL RING - F1.9
11	2	403806	BOLT M5X16	BOLT M5X16 - F1.11
12-13	1	403807	BLÆSEHUS	COVER BREATHER - F1.12

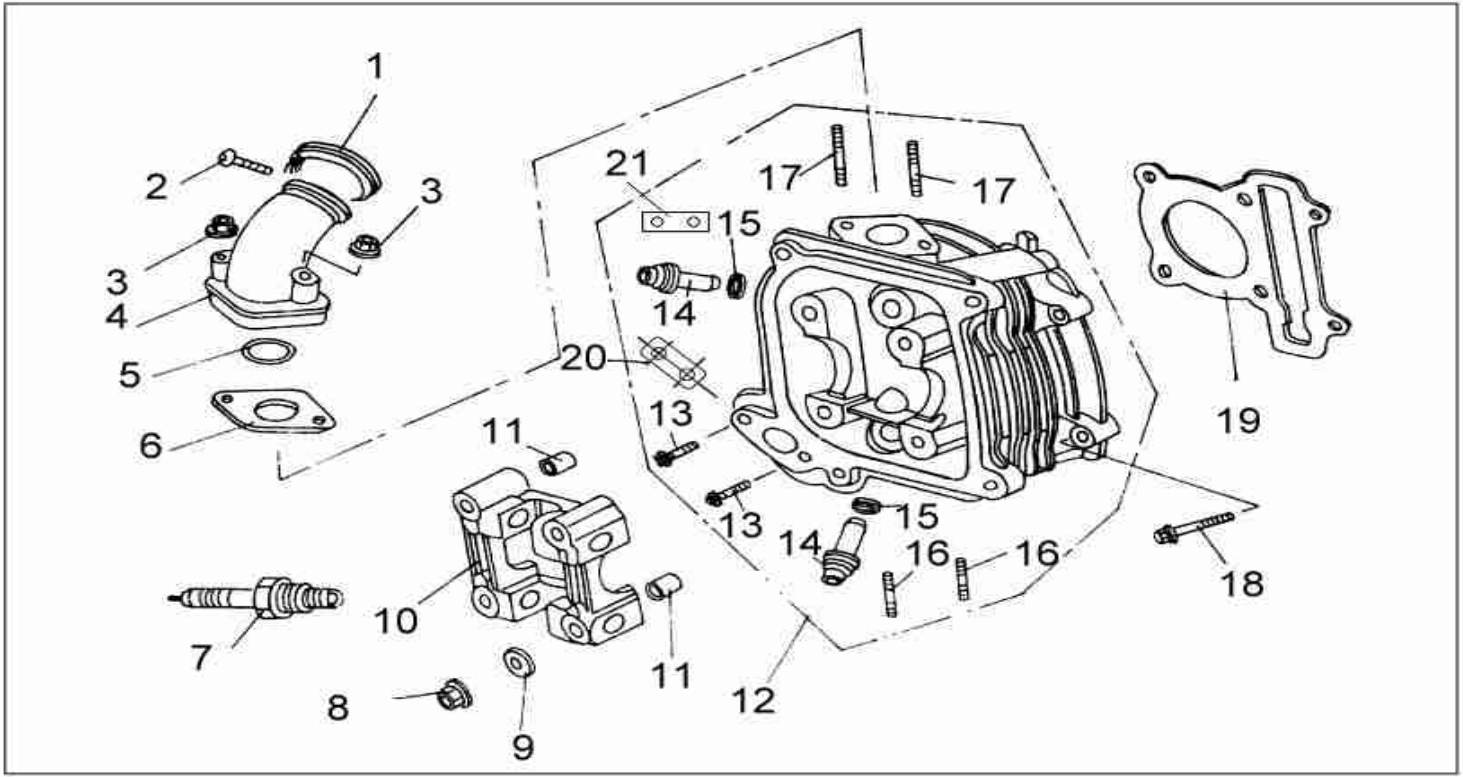
1
2
3
3
4
5
6
7
8
9
10
11
11
12
13
13
14
14
15
15
16
16
17
17
18
19
20
21

POS	QTY	PARTNUMBER	BESKRIVELSE	DESCRIPTION
1-2+4	1	403808	STUDS MED KLEMME	PIPE WITH CLAMP - F2.1-2+4
3	2	403809	MØTRIK M6	NUT M6 - F2.3
5	1	403810	O-RING	ISOLATOR, O-RING - F2.5
6	1	403811	PAKNING	GASKET - F2.6
7	1	10011448	TÆNDRØR U20FSRU	U20FSRU
8	4	403812	MØTRIK	CYLINDER HEAD NUT - F2.8
9	4	403813	SKIVE	CYLINDER HEAD WASHER - F2.9
10	1	403814	LEJEOVERFALD	CAM SEAT - F2.10
11	2	403815	STYREBØS	GUIDEBUSH - F2.11
12+14+15	1	403816	TOPSTYKKE	CYLINDER HEAD ASSY - F2.12+14-15
13	2	403817	BOLT M6X16	BOLT M6X16 - F2.13
16	2	403818	BOLT	BOLT, EXHAUST MUFFLER - F2.16
17	2	403819	BOLT	CARBURETOR BOLT, STUD - F2.17
18	2	403820	BOLT M6X85	BOLT M6X85 - F2.18
19	1	403821	TOPPAKNING	HEAD GASKET - F2.19
20	1	403822	LÅG	CAP - F2.20
21	1	403823	GUMMI PAKNING, LÅG	CAP RUBBER GASKET - F2.21

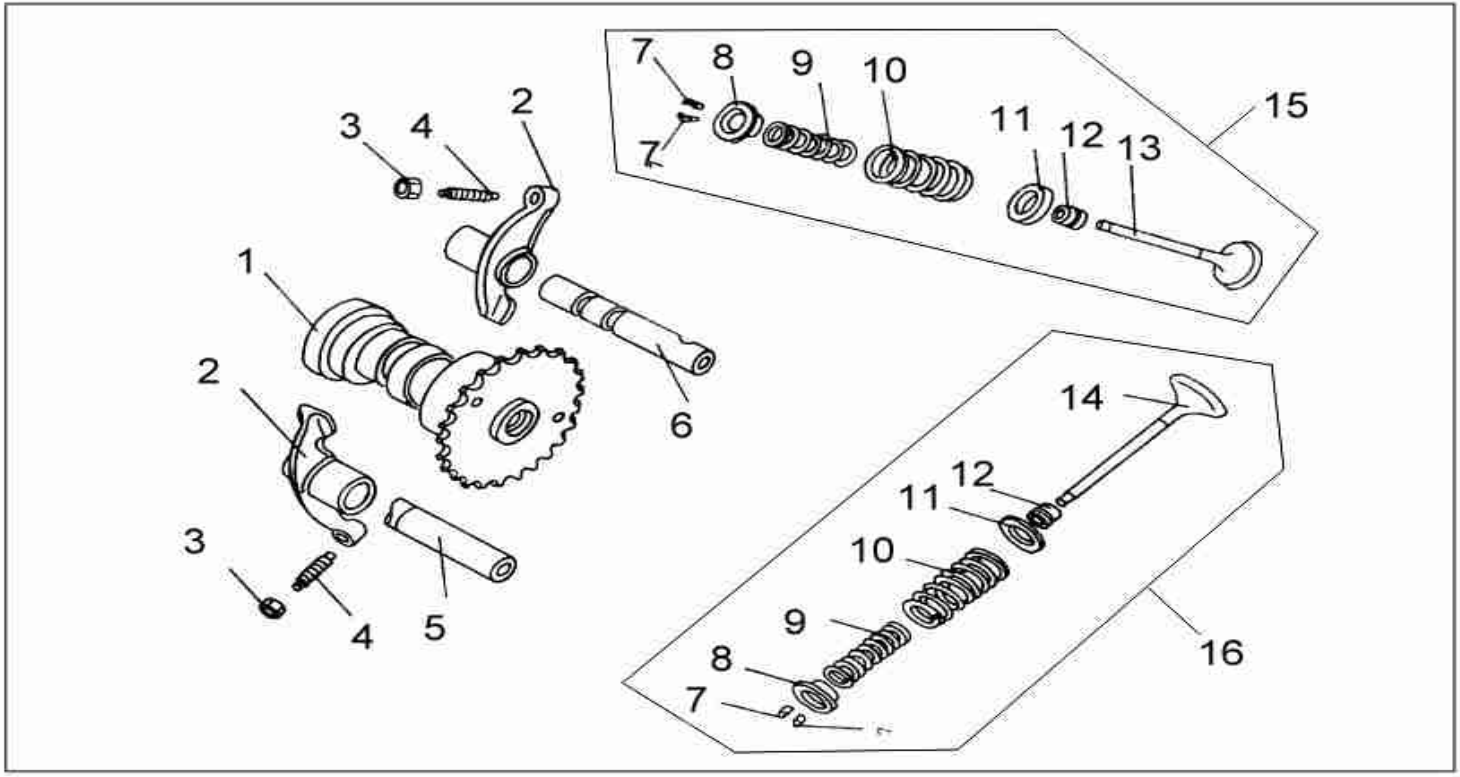
7
8
9
10
15
11
12
13
7
3
4
2
1
2
6
3
4
5
14
12
11
10
9
8
7
16

POS	QTY	PARTNUMBER	BESKRIVELSE	DESCRIPTION
1	1	403824	KNASTAKSEL	CAMSHAFT - F3.1
2	2	403825	VIPPEARM	ROCKERARM ASSY - F3.2
3	1	403825C	MØTRIK FOR STILLESKRUE	NUT FOR ADJUSTMENT
4	1	403825D	STILLESKRUE FOR VENTIL	ADJUSMENT SCREW
5	1	403825A	AKSEL UDSTØDNINGSSIDE	SHAFT EXHAUST
6	1	403825B	AKSEL INDSUGNINGSSIDE	SHAFT INTAKE
7	2	403826	VENTIL LÅS	VALVE LOCK - F3.7
8	2	403827	BUND FOR FJEDER	SPRINGSEAT UPPER - F3.8
9	2	403828	VENTIL FJEDER INDRE	VALVESPRING INNER - F3.9
10	2	403829	VENTIL FJEDER YDRE	VALVESPRING OUTER - F.310
11	2	403830	BUND FOR FJEDER	SPRINGSEAT LOWER - F3.11
12	2	403831	PAKDÅSE	SEAL - F3.12
13	1	403832	VENTIL IND	VALVE INTAKE - F3.13
14	1	403833	VENTIL UD	VALVE EXHAUST - F3.14

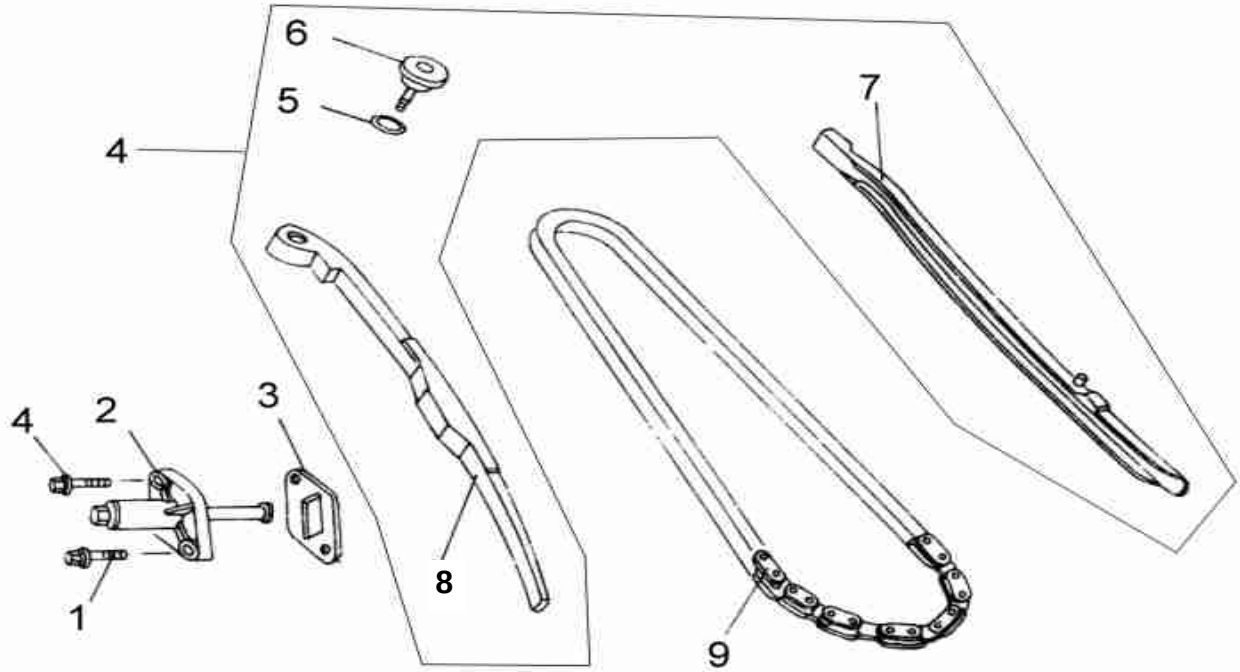
6
5
4
7
4
2
3
8
1
9

POS	QTY	PARTNUMBER	BESKRIVELSE	DESCRIPTION
1	2	403834	BOLT M6X16	BOLT M6X16 - F4.1
2	1	403835	JUSTERINGSKÆDE	TENSIONER ASSY - F4.2
3	1	403836	PAKNING	GASKET - F4.3
5	1	403837	O-RING	O-RING - F4.5
6	1	403838	SKRUE	SCREW - F4.6
7	1	403839	KÆDESTYR NEDERST	TENSIONER LOWER - F4.7
8	1	403840	KÆDESTYR ØVERST	TENSIONER UPPER- F4.8
9	1	403841	KNASTKÆDE	CAMCHAIN - F4.9

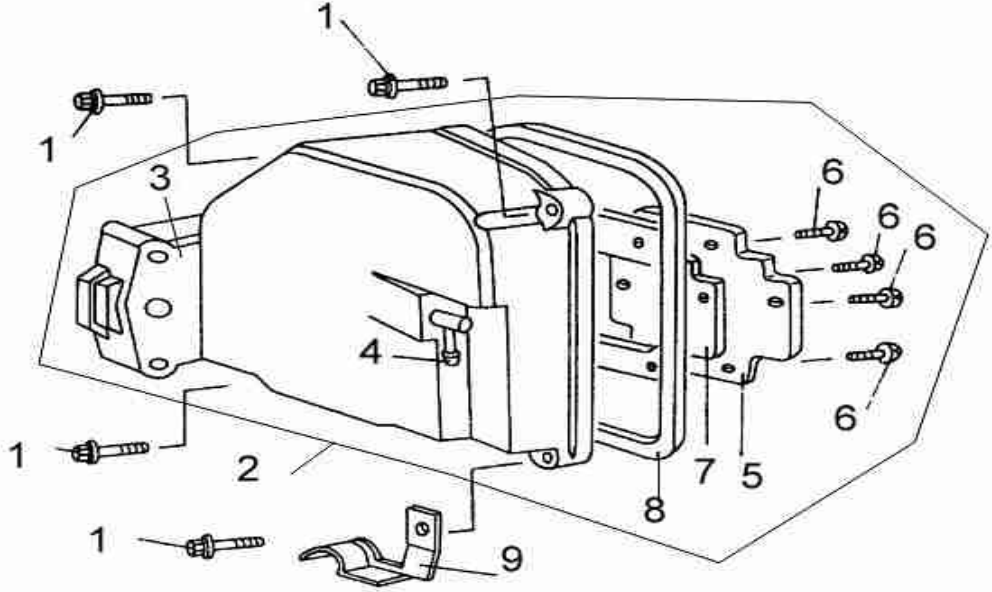
1
1
1
3
6
6
6
4
6
1
2
7
5
8
1
9

POS	QTY	PARTNUMBER	BESKRIVELSE	DESCRIPTION
1	4	403842	BOLT M6X25	BOLT M6X25 - F5.1
3	1	403843	VENTILDÆKSEL	CYLINDER COVER - F5.3
4	1	403844	VENTILRØR	VENTILATING TUBE CONNECTOR - F5.4
5	1	403845	DÆKSEL	VENTILATING CHAMBER COVER - F5.5
6	4	403846	BOLT M4X8	BOLT M4X8 - F5.6
7	1	403847	PAKNING	VENTILATING CHAMBER GASKET - F5.7
8	1	403848	PAKNING	CYLINDER COVER GASKET - F5.8
9	1	403849	HOLDER	CLIPTUBE - F5.9

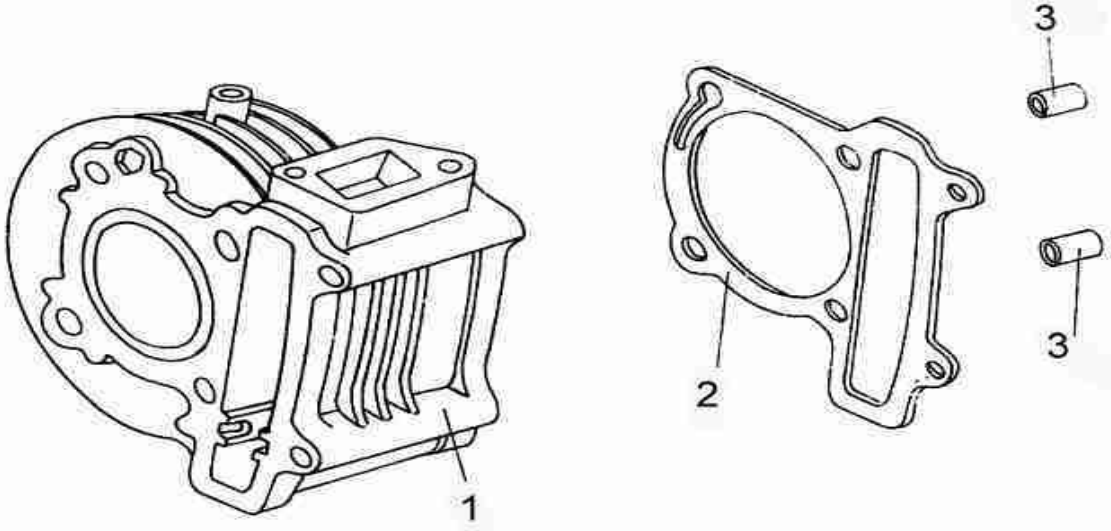
1
2
3
3

POS	QTY	PARTNUMBER	BESKRIVELSE	DESCRIPTION
1	1	403850	CYLINDER	CYLINDER ASSY - F6.1
2	1	403851	CYLINDERPAKNING	GASKET, CYLINDER - F6.2
3	2	403852	STYREBØS	GUIDEBUSH - F6.3

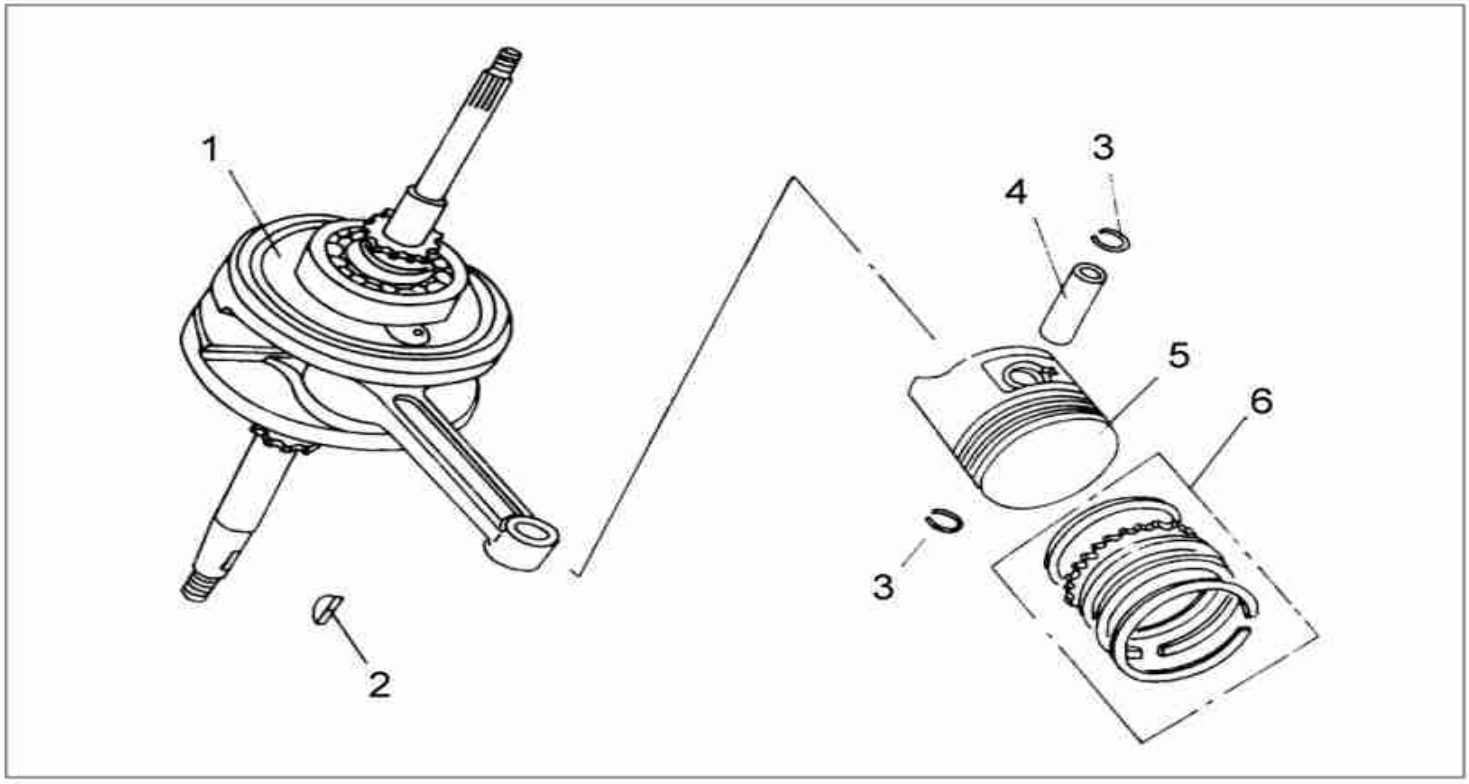
1
2
3
4
3
5
6

POS	QTY	PARTNUMBER	BESKRIVELSE	DESCRIPTION
1-2	1	403853	KRUMTAP MED FEDER	GRANKSHAFT WITH KEY - F7.1
3	2	403854	LÅS	PISTON PIN CLIP - F7.3
4	1	403855	KRYDSPIND	PIN PISTON - F7.4
5	1	403856	STEMPEL	PISTON - F7.5
6	1	403857	STEMPEL RINGE SÆT	PISTON RING ASSY - F7.6

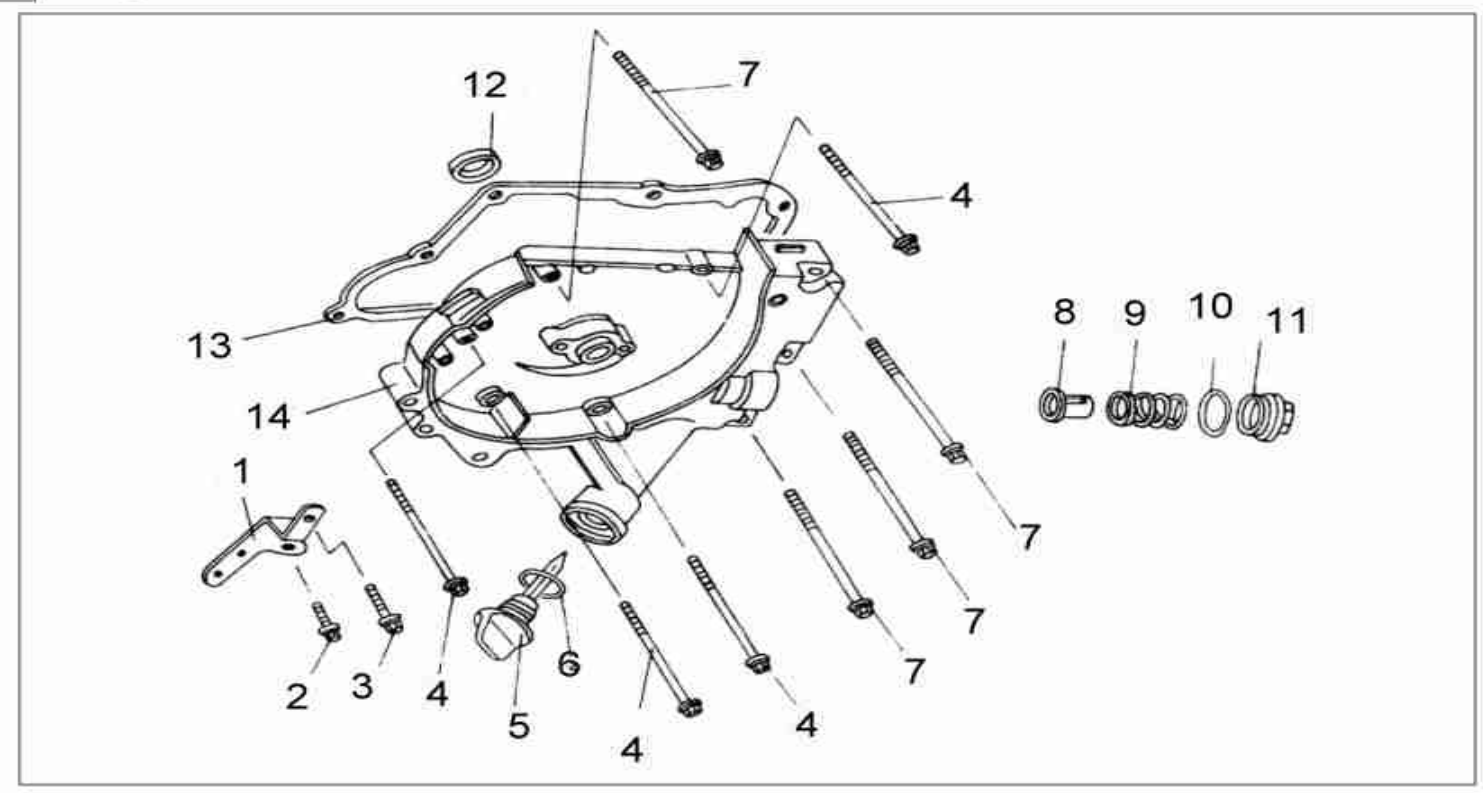
12
7
4
13
14
1
2
3
4
5
6
4
4
7
7
7
7
8
9
10
11

POS	QTY	PARTNUMBER	BESKRIVELSE	DESCRIPTION
1	1	403858	BESLAG	FENDER FRAME - F8.1
2	1	403859	BOLT M6X16	BOLT M6X16 - F8.2
3	1	403860	BOLT M6X25	BOLT M6X25 - F8.3
4	4	403861	BOLT M6X85	BOLT M6X85 - F8.4
5	1	403862	OLIE MÅLER	OIL LEVEL GAUGE - F8.5
6	1	403863	O-RING	O-RING, OIL FILTER - F8.6
7	4	403864	BOLT M6X100	BOLT M6X100 - F8.7
8	1	403865	OLIE FILTER	OIL FILTER - F8.8
9	1	403866	FJEDER	SPRING, OIL FILTER - F8.9
10	1	403867	O-RING	O-RING,OIL FILTER COVER - F8.10
11	1	403868	PROP, OLIE	CAP, OIL FILTER COVER - F8.11
12	1	403869	PAKDÅSE	OIL SEAL ASSY, R-COVER - F8.12
13	1	403870	PAKNING	GASKET, R-COVER - F8.13
14	1	403871	DÆKSEL, HØJRE	RIGHT COVER - F8.14

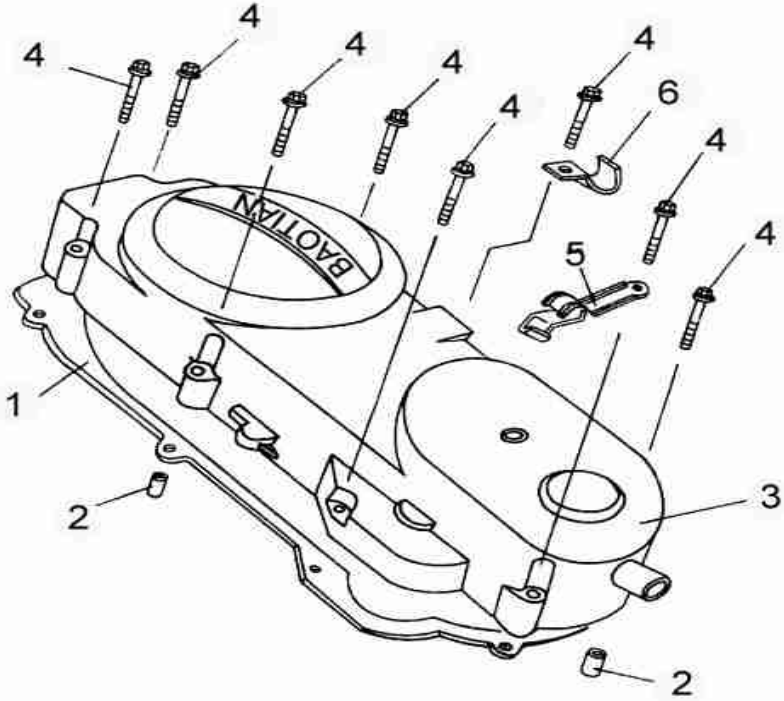
4
4
4
4
4
4
4
6
4
4
5
1
2
3
2
BAOTIAN

POS	QTY	PARTNUMBER	BESKRIVELSE	DESCRIPTION
1	1	403872	PAKNING	GASKET, L-COVER - F9.1
2	2	403873	STIFT	DOWEL PIN - F9.2
3	1	403874	DÆKSEL "BAOTIAN"	LEFT COVER "BAOTIAN" - F9.3
3	1	403874A	DÆKSEL "TEXAS"	LEFT COVER "TEXAS" -F9.3
4	8	403875	BOLT M6X35	BOLT M6X35 - F9.4
5	1	403876	KABELHOLDER	CLAMPER ASSY - F9.5
6	1	403877	KABELHOLDER BREMSEKABEL	CLAMPER, BRAKER CABLE - F9.6

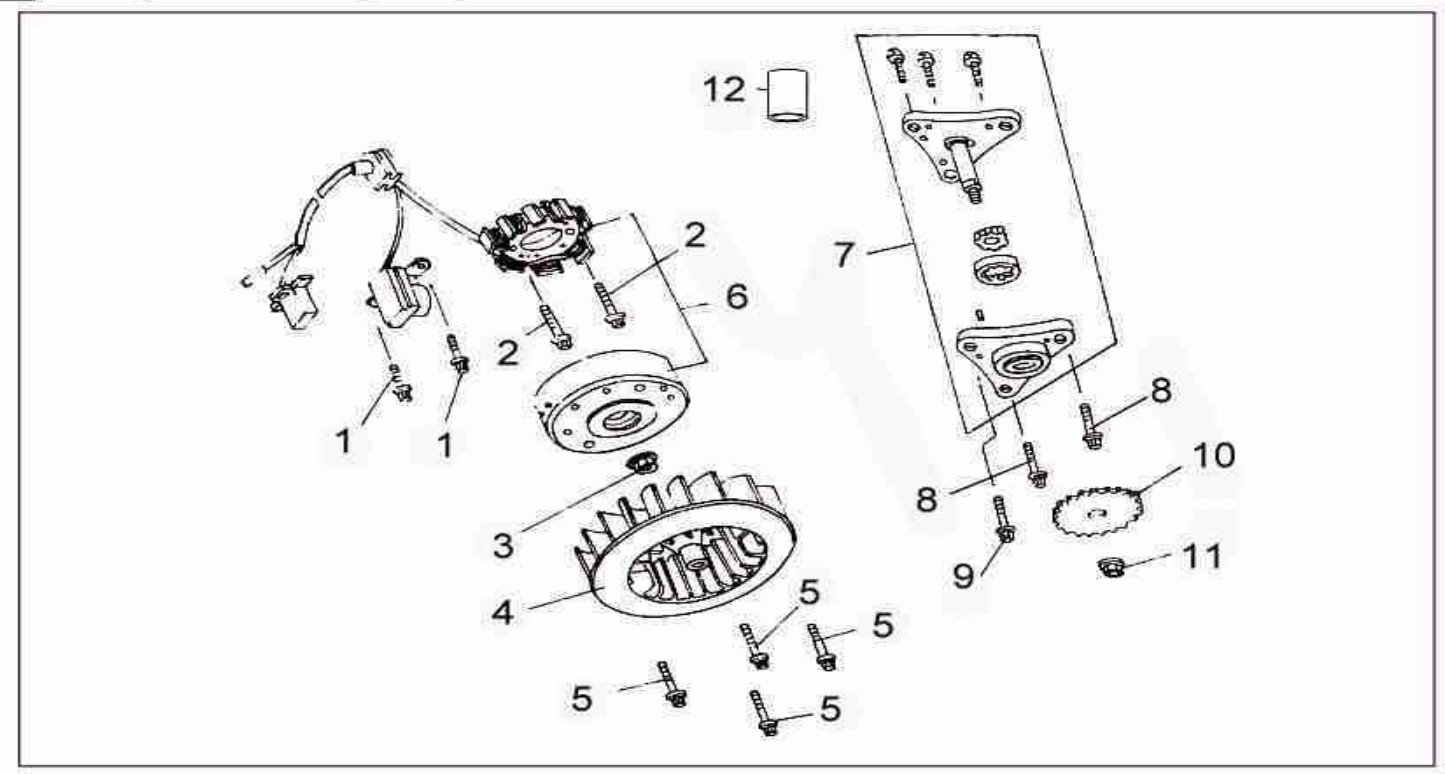
12
2
7
6
2
1
1
8
10
8
9
11
3
4
5
5
5
5

POS	QTY	PARTNUMBER	BESKRIVELSE	DESCRIPTION
1	2	403878	BOLT M5X12	BOLT M5X12 - F10.1
2	2	403879	BOLT M6X22	BOLT M6X22 - F10.2
3	1	403880	MØTRIK M10X1.25	R.NUT, CAMSHAFT - F10.3
4	1	403881	BLÆSEHJUL	COOLING FAN - F10.4
5	4	403882	BOLT M6X16	BOLT M6X16 - F10.5
6	1	403883	GENERATOR KPL	GENERATOR ASSY - F10.6
7	1	403884	OLIEPUMPE KOMPLET	OIL PUMP ASSY - F10.7
8	2	403885	BOLT M6X20	BOLT M6X20 - F10.8
9	1	403886	BOLT M6X25	BOLT M6X25 - F10.9
10	1	403887	TANDHJUL	CHAIN OIL PUMP DIVER - F10.10
11	1	403888	MØTRIK M6	NUT M6 - F10.11
12	1	403889	PAL	OIL PUMP DOWEL PIN - F10.12

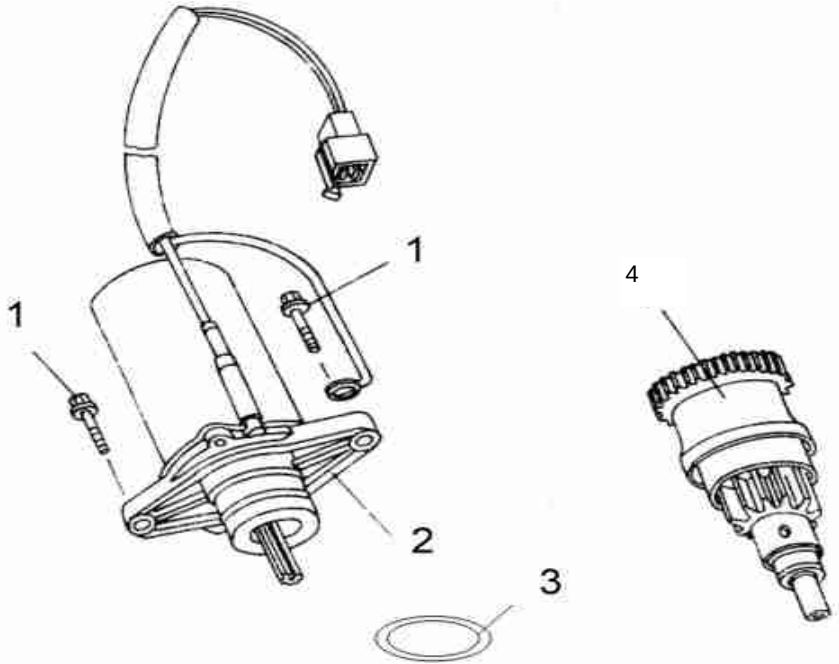
1
1
2
3
4

POS	QTY	PARTNUMBER	BESKRIVELSE	DESCRIPTION
1	2	403890	BOLT M6X25	BOLT M6X25 - F11.1
2-3	1	403891	STARTER MOTOR KOMPLET	STARTER MOTOR ASSY - F11.2
4	1	403892	STARTERDREV ELSTART	SINGLE DIRECTOR ASSY - F11.4

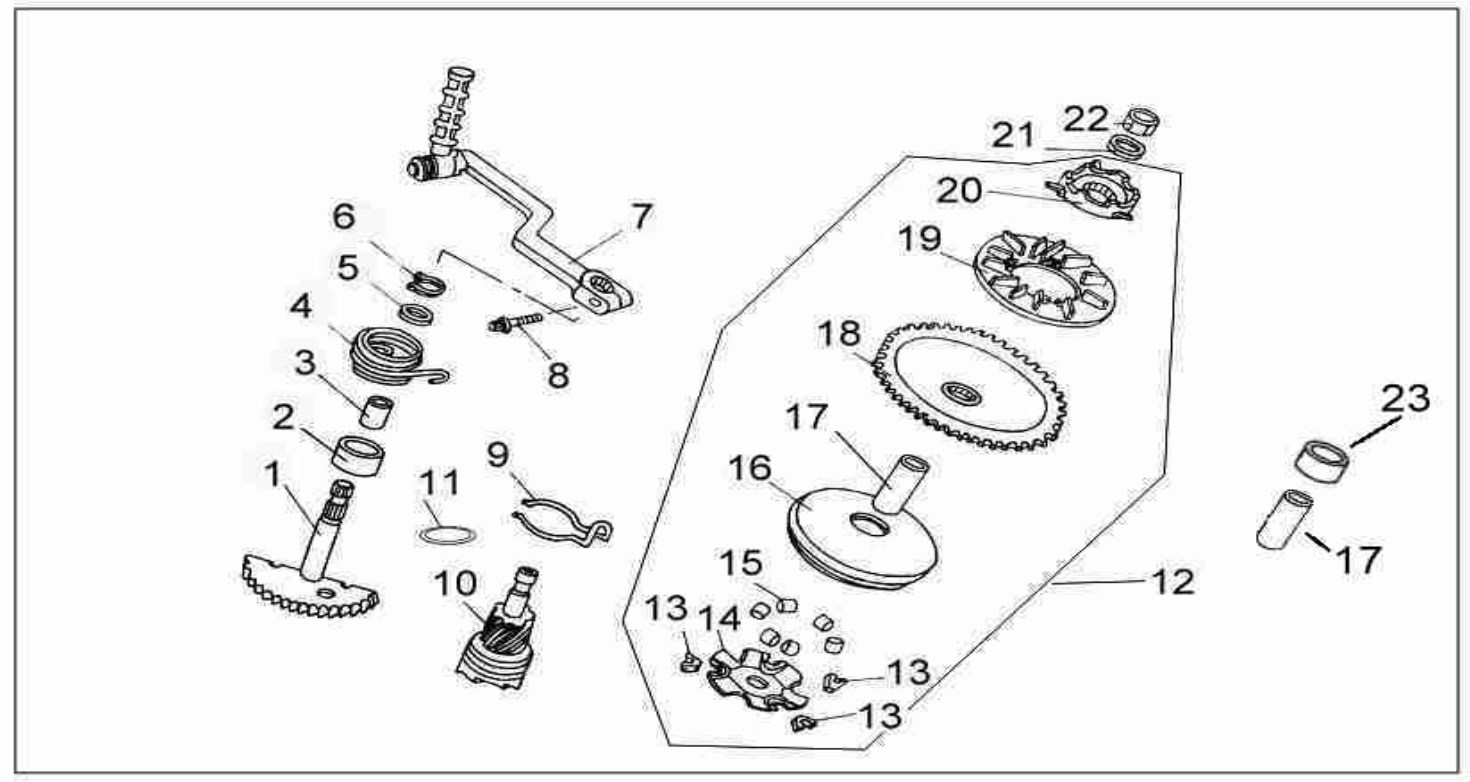
1
2
3
4
5
6
7
8
9
10
11
12
13
14
15
16
17
18
19
20
21
22
23
17
13
13
13

POS	QTY	PARTNUMBER	BESKRIVELSE	DESCRIPTION
1	1	403893	STARTERDREV KICKSTART KORT 48MM	KICK STARTER SHAFT SHORT 48MM
2	1	403893A	BØS	BUSH - F12.2
3	1	403893B	BØS	BUSH F12.3
4	1	403893C	FJEDER	SPRING - F12.4
5	1	403993D	SKIVE	WASHER - F12.5
6	1	403893E	LÅSERING	LOCKRING - F12.6
7	1	403894	KICK STARTER ARM	ARM ASSY, KICK STARTER - F12.7
8	1	403895	BOLT M6X22	BOLT M6X22 - F12.8
9	1	403896	FJEDER	SPRING - F12.9
10	1	403897	GEAR	GEAR COMP, IDLE - F12.10
11	1	403898	SKIVE	WASHER - F12.11
12-20	1	403900	VARIO KOMPLET 30 KM	VARIO ASSY 30 KM
13	1	407614	GLIDESTYKKE FOR VARIO	HOLDER FOR VARIO
17	1	404338	BØS 30KM/T	BUSH FLASH 30-4 F12.17
21	1	403901	SKIVE Ø12	WASHER Ø12 - F12.21
22	1	403902	MØTRIK M12X1.25	NUT M12X1.25 - F12.22
23	1	404339	RING 30KM/T 7,5MM	RING 30KM 7,5MM-F12.23

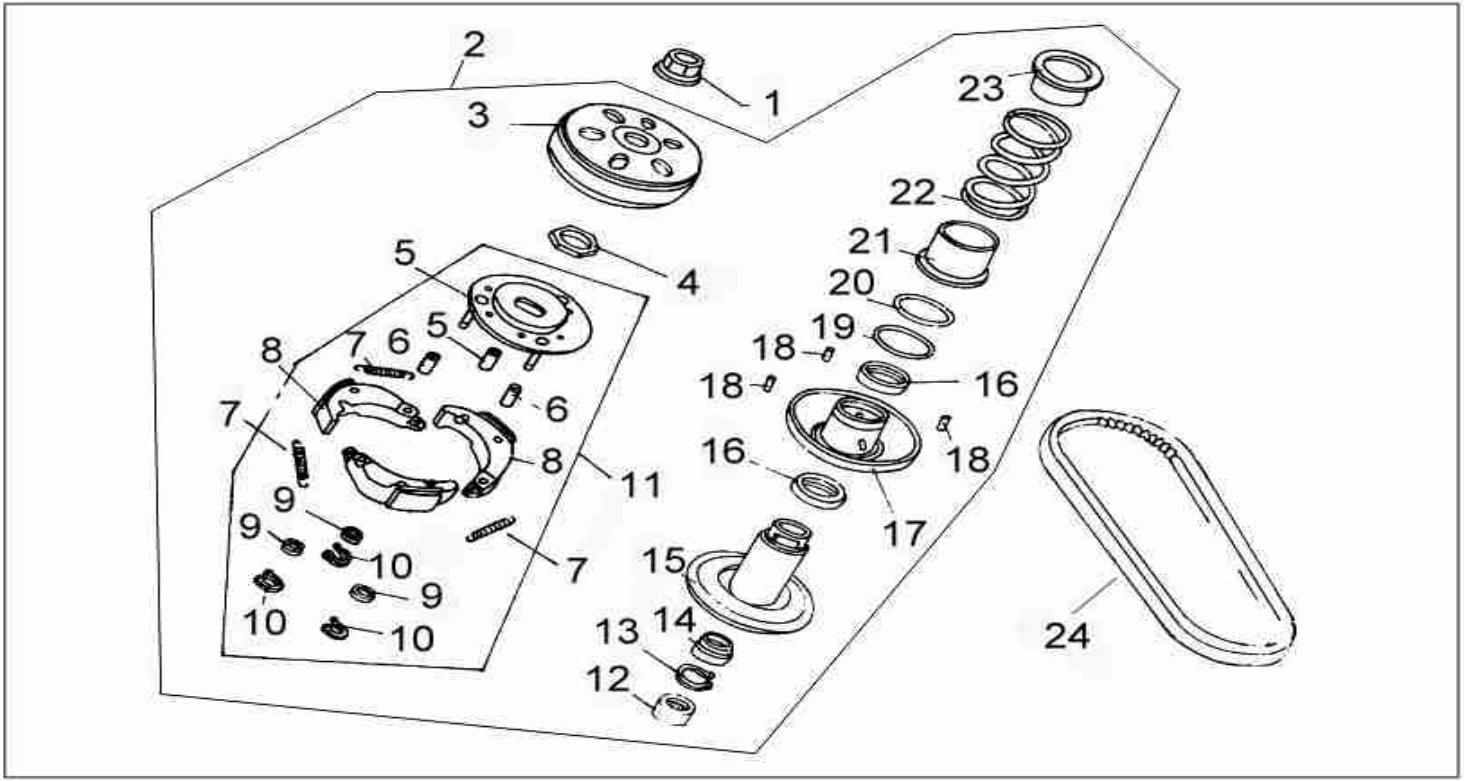

2
1
3
23
22
21
4
5
20
19
5
18
8
7
6
18
16
6
7
8
16
18
11
9
17
9
10
7
15
9
10
10
13
14
24
12

POS	QTY	PARTNUMBER	BESKRIVELSE	DESCRIPTION
1	1	403903	MØTRIK M10X1.25	NUT M10X1.25 - F13.1
2-23	1	403904	KOBLING KOMPLET	DRIVER PULLER ASSY - F13.2
24	1	403905	REM	V-BELT - F13.24

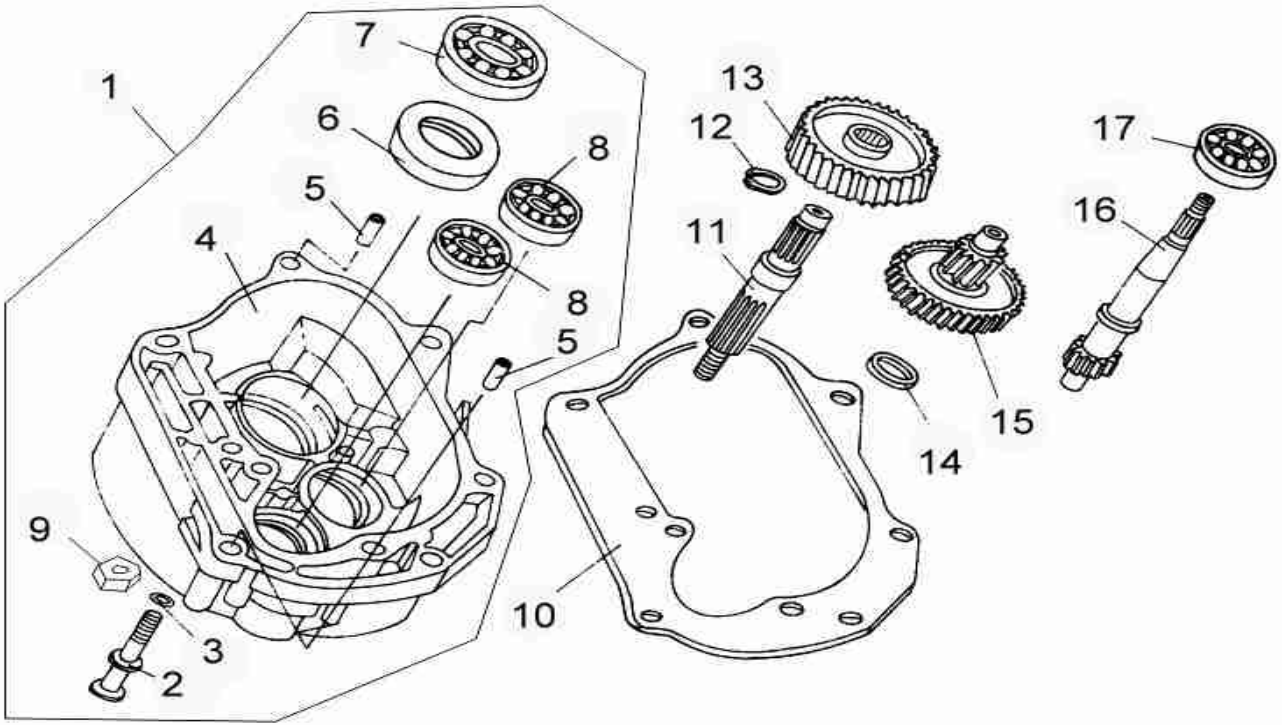
1
2
3
4
5
5
6
7
8
8
9
10
11
12
13
14
15
16
17

POS	QTY	PARTNUMBER	BESKRIVELSE	DESCRIPTION
1	1	403906	GEARKASSE KPL	REAR TRANSMISSION BOX ASSY - F14.1
2+11	1	403907	AKSEL MED PAL	SHAFT ASSY - F14.2
3	1	403908	O-RING	O-RING - F14.3
4	1	403909	DÆKSEL FOR GEARKASSE	REAR TRANSMISSION BOX - F14.4
5	2	403910	BØS	PIN- F14.5
6	1	403911	PAKDÅSE	OIL SEAL ASSY - F14.6
7	1	403912	LEJE	BEARING - F14.7
8	2	403913	LEJE	BEARING - F14.8
9	1	403914	MØTRIK M8	NUT M8 - F14.9
10	1	403915	PAKNING	GASKET, REAR COVER - F14.10
12	1	403916	LÅS	CLIP - F14.12
13	1	403917	GEAR, TANDHJUL	GEAR - F14.13
14	1	403918	SKIVE	WASHER - F14.14
15	1	403919	AKSEL	COUNTERSHAFT - F14.15
16	1	403920	AKSEL	DRIVESHAFT - F14.16
17	1	403921	LEJE	BEARING - F14.17

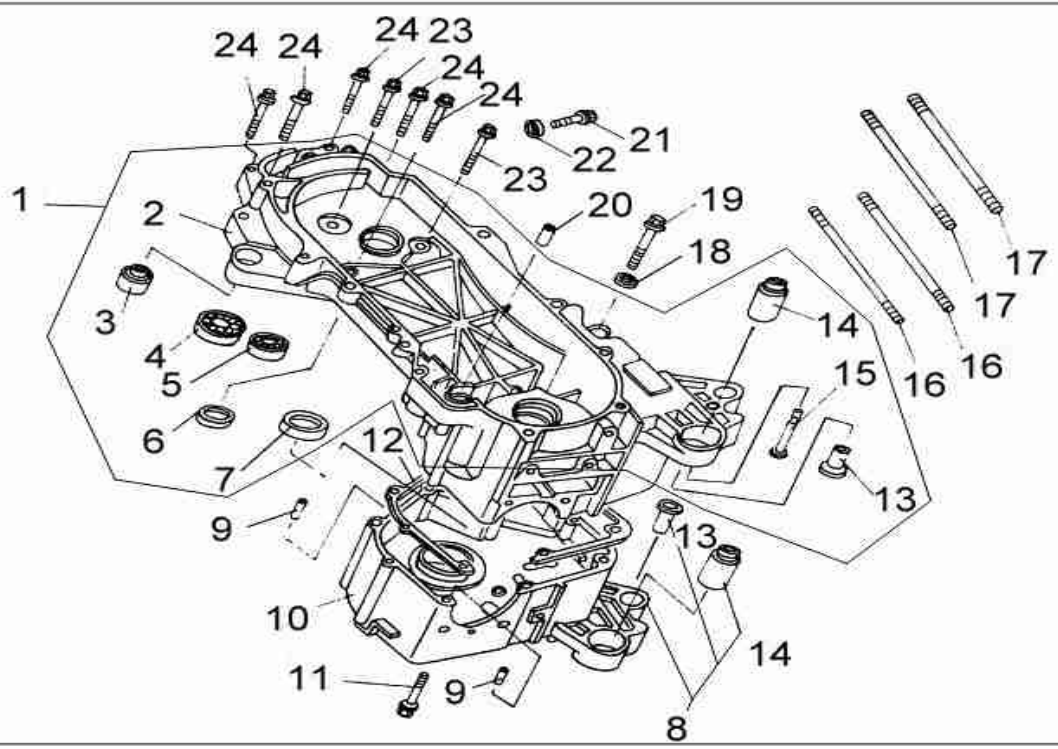
24
24
24
23
24
24
24
23
22
21
20
19
18
17
17
16
16
14
15
13
1
2
3
4
5
6
7
12
9
10
11
9
13
14
8

POS	QTY	PARTNUMBER	BESKRIVELSE	DESCRIPTION
1	1	403922	KRUMTAPHUS KPL VENSTRE	CRANKCASE ASSY L.- F15.1
2	1	403923	KRUMTAPHUS VENSTRE	CRANKCASE L.- F15.2
3	1	403924	OPHÆNG	BUSH - F15.3
4	2	403925	LEJE	BEARING - F15.4
5	1	403926	LEJE	BEARING - F15.5
6	1	403927	RING	SEAL - F15.6
7	1	403928	PAKDÅSE	OIL SEAL - F15.7
8	1	403929	KRUMTAPHUS HØJRE KPL	CRANKCASE ASSY R - F15.8
9	2	403930	PAL	PIN, DOWEL - F15.9
10	1	403931	KRUMTAPHUS HØJRE	CRANCASE R.- F15.10
11	1	403932	BOLT M6X45	BOLT M6X45 - F15.11
12	1	403933	PAKNING	GASKET, CRANKCASE - F15.12
13	2	403934	BØS	BUSH - F15.13
14	2	403935	BØS	BUSH -F15.14
15	2	403936	AKSEL	FIXNG SHAFT - F15.15
16	2	403937	BOLT	STUD - F15.16
17	2	403938	BOLT	STUD - F15.17
18	1	403939	SKIVE Ø12	WASHER, PLUG Ø 12 - F15.18
19	1	403940	BOLT	DRAM PLUG - F15.19
20	1	403941	BØS	BUSH - F15.20
21	1	403942	BOLT M8X12	BOLT M8X12 - F15.21
22	1	403943	SKIVE Ø8	WASHER Ø8 - F15.22
23	2	403944	BOLT M8X35	BOLT M8X35 - F15.23
24	5	403945	BOLT M8X40	BOLT M8X40 - F15.24

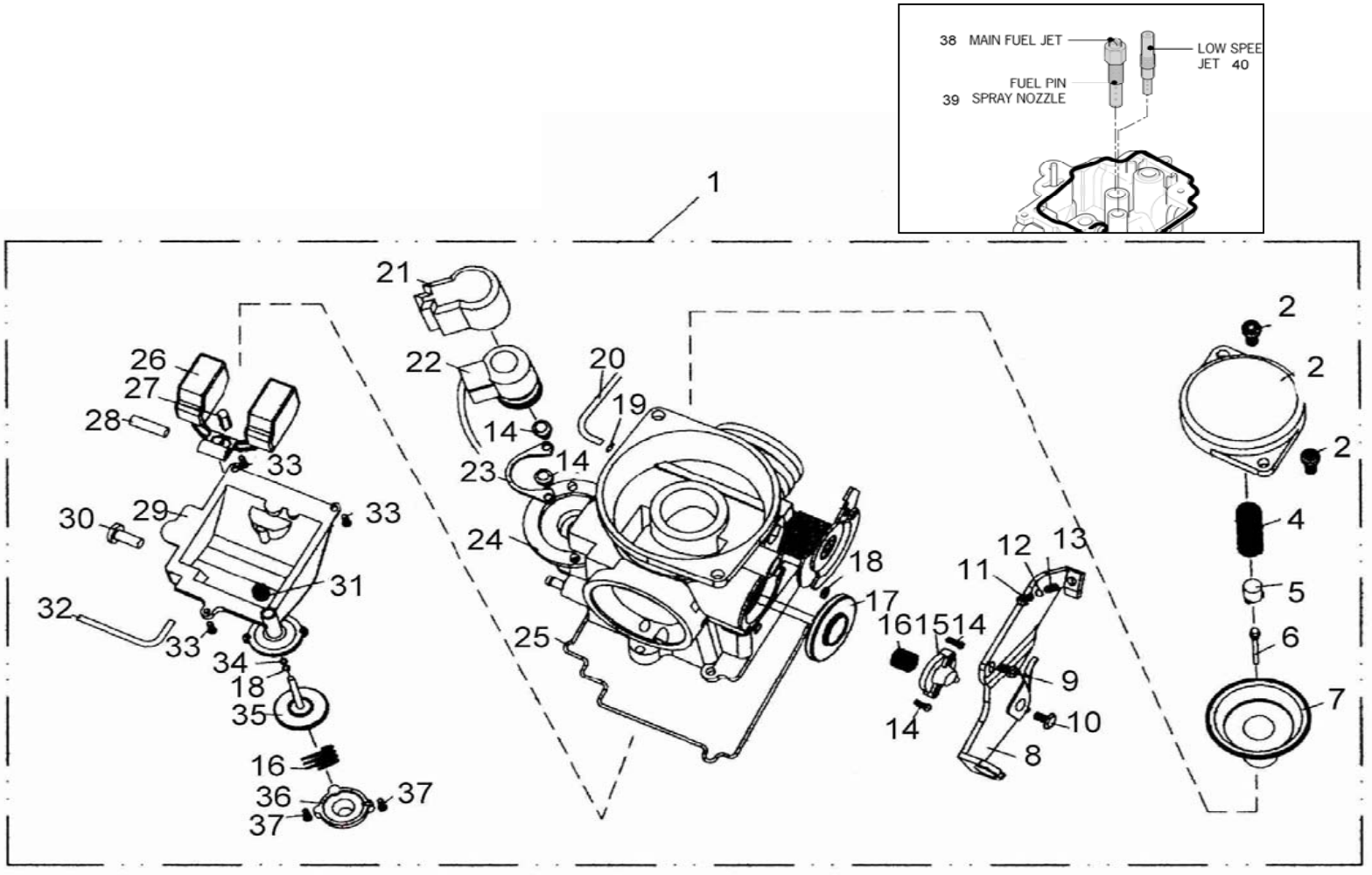
38 MAIN FUEL JET
LOW SPEE
JET 40
FUEL PIN
39 SPRAY NOZZLE
1
21
22
20
19
14
23
14
24
18
17
25
16
15
14
11
12
13
9
10
8
14
2
2
2
4
5
6
7
26
27
28
33
30
29
33
31
32
33
34
18
35
16
36
37
37

POS	QTY	PARTNUMBER	BESKRIVELSE	DESCRIPTION
1	1	403946A	KARBURATOR 30KM	CARBURETOR 30KM - F16.1
2	2	403947	SKRUE	SCREW SPRING PLATE - F16.2
3	1	403948	PLADE	SPRING PLATE - F16.3
4	1	403949	FJEDER	PLATE SPRING - F16.4
5	1	403950	FJEDERSÆDE	SPRING SOCKET - F16.5
6	1	403952	NÅL 30 KM	JET CARBURETOR FLASH 30-4- F16.6
7	1	403953	STEMPEL MED MEMBRAM	PISTON VACUUM ASSY 45KM-F16.7
7	1	403953A	STEMPEL MED MEMBRAM	PISTON VACUUM ASSY 30KM-F16.7
8	1	403954	CHOKERARM	CONTORL LEVER - F16.8
9	1	403955	BOLT M5X8	BOLT M5X8 - F16.9
10	1	403956	BOLT M5X14	BOLT M5X14 - F16.10
11	1	403957	BOLT M4X14	BOLT M4X14 - F16.11
12	1	403958	SKIVE	WASHER 4 - F16.12
13	1	403959	FJEDER	SPRING - F16.13
14	4	403960	BOLT M4X8	BOLT M4X8 - F16.14
15	1	403961	VENTIL LÅG	VALVE COVER - F16.15
16	2	403962	VENTIL FJEDER	VALVESPRING - F16.16
17	1	403963	VENTIL	VALVE - F16.17
18	2	403964	RING	SEALING RING - F16.18
19	1	403965	KLEMME	CLIP, TUBE - F16.19
20	1	403966	LUFT RØR	BREATHER TUBE - F16.20
21	1	403967	LÅG	CAP, STATER VALVE - F16.21
22	1	403968	CHOKER	CHOKER - F16.22
23	1	403969	HOLDER	STARTER SOCKET - F16.23
24	1	403970	KARBURATOR HUS	CARBURETOR BODY - F16.24
25	1	403971	PAKNING	SEAL , FLOAT CHAMBER - F16.25
26	1	403972	SVØMMER	FLOAT - F16.26
27	1	403973	SVØMMER NÅL	FLOAT VALVE ASSY - F16.27
28	1	403974	BØS	PIN, FLOAT VALVE - F16.28
29	1	403975	BUND FOR KARBURATOR	CARBURETOR COVER - F16.29
30	1	403976	BUNDSKRUE	TAPPING BOLT - F16.30
31	1	403977	LÅG	DUST SEAL CAP - F16.31
32	1	403978	OVERLØBS RØR	OVER FLOW TUBE - F16.32
33	1	403979	BOLT M4X12	BOLT M4X12 - F16.33
34	1	403980	PAKNING	SEALING RING - F16.34
35	1	403981	PUMPE NÅL	PLUG PUMP ASSY - F16.35
36	1	403982	PUMPE	PUMP LOWER COVER - F16.36
37	1	403983	BOLT M4X10	BOLT M4X10 - F16.37
38	1	405023	TOMGANGSDYSE 66 MM	MAIN NOZZLE 66 MM
38	1	405023A	TOMGSNGSDYSE 70 MM	MAIN NOZZLE 70 MM
38	1	405023B	TOMGANGSDYSE 74 MM	MAIN NOZZLE 74 MM
38	1	405023C	TOMGANGSDYSE 68 MM	MAIN NOZZLE 68 MM
38	1	405023D	TOMGANGSDYSE 72 MM	MAIN NOZZLE 72 MM
38	1	405023E	TOMGANGSDYSE 76 MM	MAIN NOZZLE 76 MM
38	1	405023F	TOMGANGSDYSE 78 MM	MAIN NOZZLE 78 MM

POS	QTY	PARTNUMBER	BESKRIVELSE	DESCRIPTION
39	1	405024	DYSERØR	NOZZLE TUBE
40	1	405025	HOVEDDYSE	MAIN NOZZLE

14

POS	QTY	PARTNUMBER	BESKRIVELSE	DESCRIPTION
1	1	403984	AKSEL FOR HJUL	AXLE FR.WHEEL - F18.1
2	1	403985	KM TÆLLER DREV	SPEED COUNTER - F18.2
4	2	403986	LEJE 6201	BEARING 6201 - F18.4
5	1	403987	BØS	CENTRAL SET - F18.5
6	1	403988	STØVHÆTTE	SEAL DUST - F18.6
7	1	403989	FÆLG	FRONT WHEEL - F18.7
8	1	403990	BØS	BUSH - F18.8
9	1	403991	MØTRIK M12X1.25	NUT M12X1.25 - F18.9
10	1	403992	DÆK 3.0-10	TYRE 3.0-10 - F18.10
10		403016	DÆK 100/90-10 BRIDGESTONE	TIRE 100/90-10 BRIDGESTONE
11	1	403993	VENTIL	VALVE - F18.11
12	1	403994	SKIVE, BREMSE	DISK BRAKE - F18.12
13	3	403995	BOLT	DISK BRAKE BOLT - F18.13
14	1	403989A	FÆLG	FRONT WHEEL - F18.14

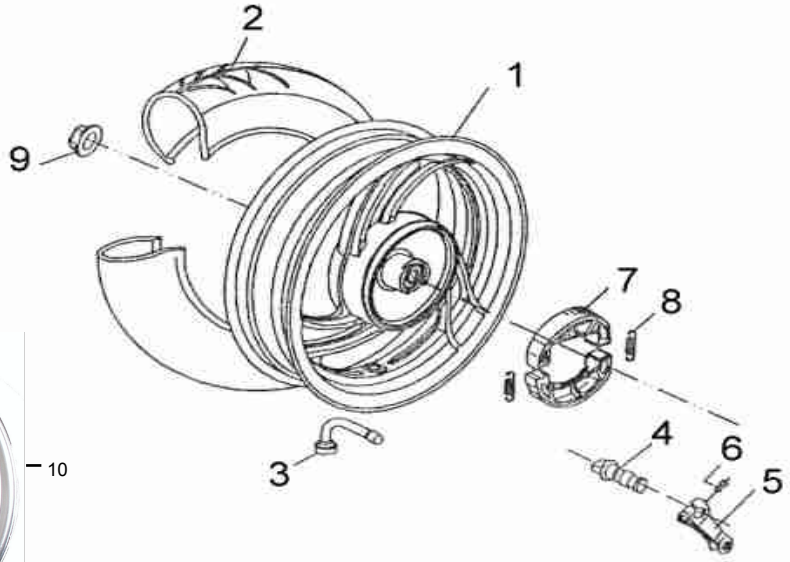
2
1
9
7
8
4
6
5
3

10

POS	QTY	PARTNUMBER	BESKRIVELSE	DESCRIPTION
1	1	403996	FÆLG BAGHJUL	REAR WHEEL - F19.1
2	1	403997	DÆK	TYRE - F19.2
3	1	403998	VENTIL	VALVE - F19.3
4	1	403999	AKSEL FOR BREMSE	REAR BRAKE CAM - F19.4
5	1	404000	ARM BAGBREMSE	REAR BRAKE LEVER - F19.5
6	1	404001	BOLT M6X35	BOLT M6X35 - F19.6
7	2	404002	BREMSEBAKKE KOMPLET	BRAKE SHOE ASSY - F19.7
8	2	404003	FJEDER	SPRING - F19.8
9	1	404004	LÅSEMØTRIK M16X1.5	LOCKNUT M16X1.5 - F19.9
10	1	403996A	FÆLG BAGHJUL	REAR WHEEL - F19.10

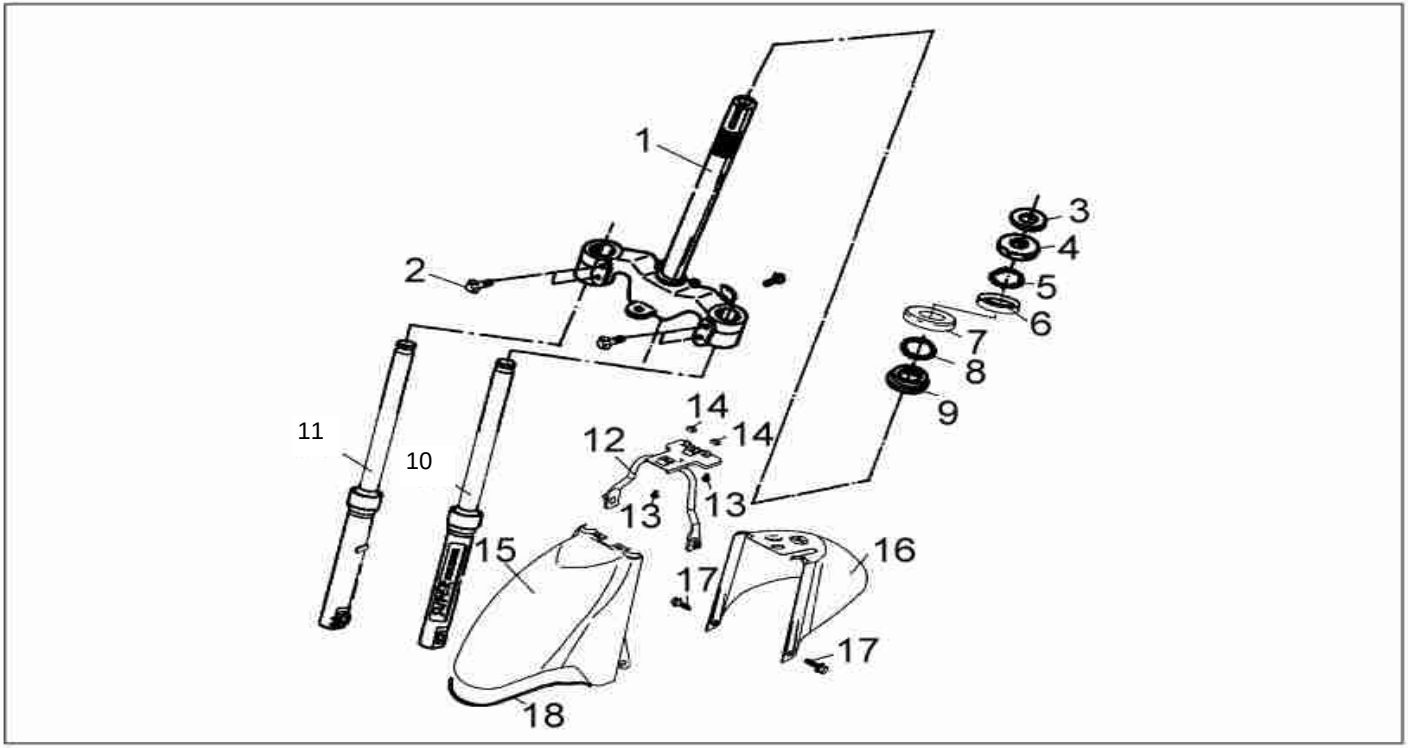
1
2
3
4
5
6
7
8
9
10
11
12
13
13
14
14
15
16
17
17
18

POS	QTY	PARTNUMBER	BESKRIVELSE	DESCRIPTION
1	1	404005	KRONRØR	STEERING COLUMN - F20.1
2	4	404006	BOLT	BOLT FLANGE - F20.2
3	1	404007	LÅSEMØTRIK	ASSMBLING NUT - F20.3
4	1	404008	MØTRIK	RACE TOP CONE NUT - F20.4
5	1	404009	LEJESKÅL ØVERST	BALL STEEL ASSY - F20.5
6	1	404010	LEJERING	RACE UPPER BALL - F20.6
7	1	404011	LEJESKÅL MELLEMSTE	RACE UNDER BALL - F20.7
8	1	404012	LEJESKÅL NEDERSTE	BALL STEEL ASSY - F20.8
9	1	404013	LEJERING	RACE CONE - F20.9
10	1	404014	STØDDÆMPER VENSTRE MAT	FR.SHOCK ASSY FLAT SILVER (L) F20.10
11	1	404015	STØDDÆMPER HØJRE MAT	FR.SHOCK ASSY FLAT SILVER (R) F20.11
12	1	404016	BESLAG FOR SKÆRM	FENDER - F20.12
13	2	404017	BOLT M6X12	BOLT M6X12 - F20.13
14	2	404018	GUMMIPAKNING	RUBBER - F20.14
15	1	409024	SKÆRM FOR SORT	FRONT FENDER BLACK NO LOGO
16	1	404022	SKÆRM BAG SORT	REAR, FRONT FENDER BLACK - F20.16
17	2	404023	BOLT M6X12	BOLT M6X12 - F20.17
18	2	404024	GUMMI PAKNING	RUBBER FRONT FENDER - F20.18

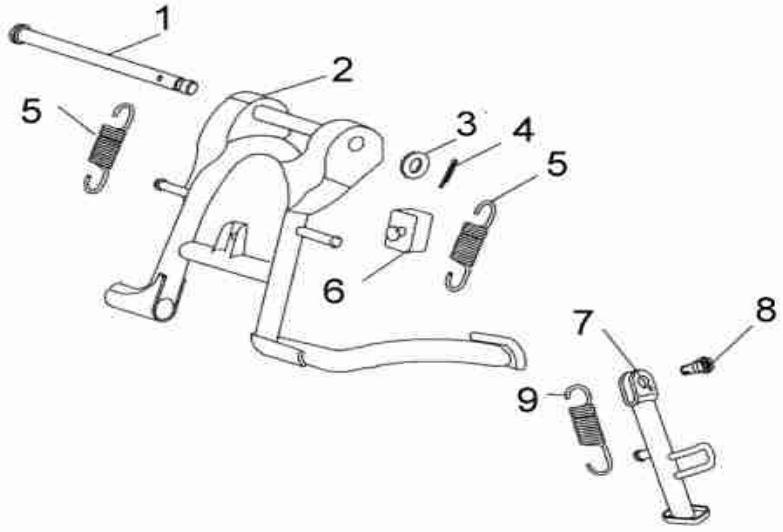
1
2
5
3
4
5
6
7
8
9

POS	QTY	PARTNUMBER	BESKRIVELSE	DESCRIPTION
1	1	404025	AKSEL	MAIN STAND ASSEMBLING COLUMN - F21.1
2	1	404026	STØTTEBEN	MAIN STAND WELDING ASSY - F21.2
3	1	404027	SKIVE	WASHER 8 - F21.3
4	1	404028	PIN 1.5X24	COTTER PIN 1.5X24 - F21.4
5	2	404029	FJEDER	SPRING - F21.5
6	1	404030	GUMMI STOPPER	LIMIT SPACE RUBBER (STOPPER) -F21.6
7	1	404031	SIDE STØTTEBEN	SIDE STAND WELDING ASSY - F21.7
8	1	404032	BOLT	BOLT - F21.8
9	1	404033	FJEDER	TENSION SPRING SET - F21.9

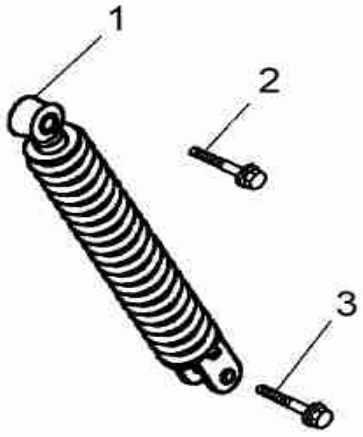
1
2
3

POS	QTY	PARTNUMBER	BESKRIVELSE	DESCRIPTION
1	1	404034	STØDDÆMPER BAG	REAR SHOCK ABSORBER ASSY - F22.1
2	1	404035	BOLT M10X70	BOLT M10X70 - F22.2
3	1	404036	BOLT M8X35	BOLT M8X35 - F22.3

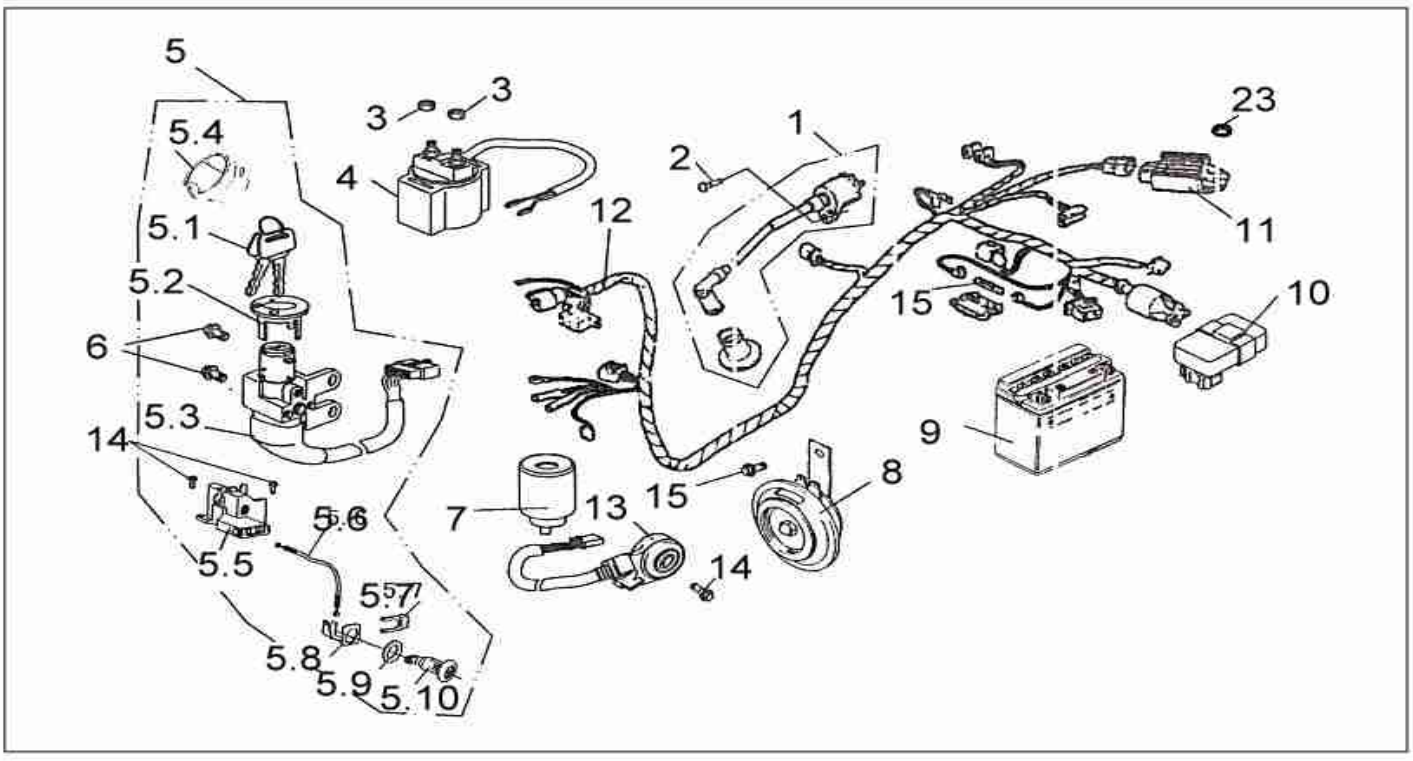
5
5.4
5.1
5.2
6
5.3
14
5.5
5.6
5.7
5.8
5.9
5.10
3
3
4
12
1
2
23
11
15
10
9
8
15
7
13
14

POS	QTY	PARTNUMBER	BESKRIVELSE	DESCRIPTION
1	1	404037	TÆNDSPOLE KOMPLET	IGNITION COIL ASSY - F23.1
2	1	404038	BOLT M6X20	BOLT M6X20 - F23.2
3	3	404039	MØTRIK M6	NUT M6 - F23.3
4	1	404040	STARTRELÆ	START RELAY - F23.4
5	1	404041	TÆNDINGSLÅS SÆT	SWITCH ASSY - F23.5
6	2	404042	BOLT M6X12	BOLT M6X12 - F23.6
7	1	404043	RELÆ BLINK	BUZZER FLASH RELAY - F23.7
8	1	404044	HORN	HORN - F23.8
9	1	404045	BATTERI 12V 5AH	BATTERY 12V/5AMP
10	1	404047	C.D.I. 30KM/T	C.D.I. 30KM/T- F23.10
11	1	404048	REGULATOR	RECTIFIER ADJUSTER - F23.11
12	1	404049	LEDNINGSNET	WIRING ASSY - F23.12
12	1	404049a	LEDNINGSNET. TIL ALARM SYSTEM	WIRING ASSY ALARM - F23.12
13	1	404050	KONTAKT VED STØTTEBEN	SWITCH ASSY - F23.13
14	3	404051	BOLT M6X16	BOLT M6X16 - F23.14
15	1	404052	GLASSIKRING 30AH	FUSE - F23.15
16	1	407989	STIK MED STIKBEN	

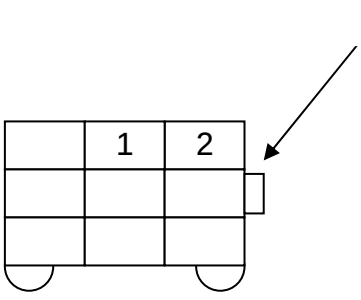

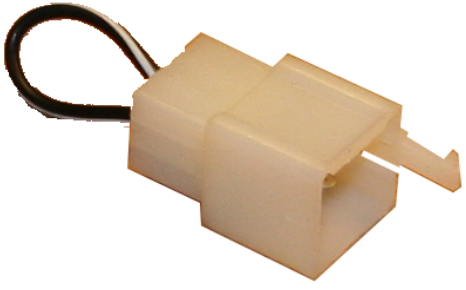

407989

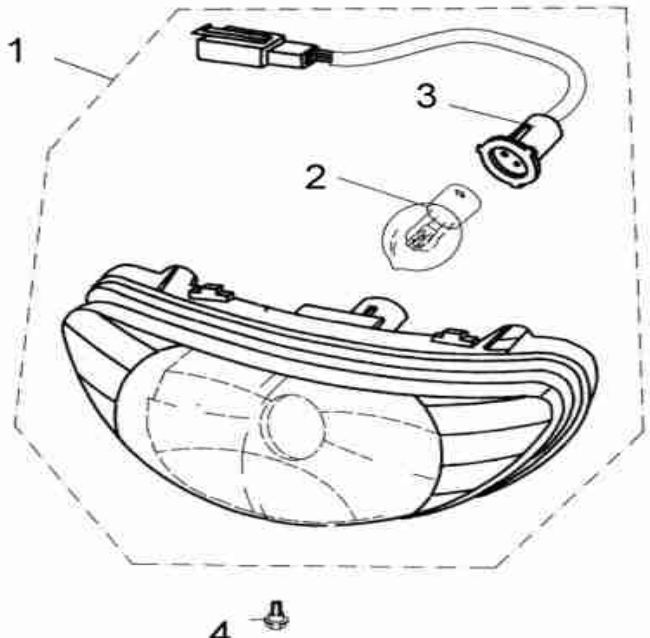
1
3
2
4

POS	QTY	PARTNUMBER	BESKRIVELSE	DESCRIPTION
1	1	404053	FORLYGTE KOMPLET	HEAD LIGHT ASSY - F24.1
2	1	401305	PÆRE 12V 35/35W	BULB 12V 35/35W
3	1	404054	FATNING	SCOCKET - F24.3
4	1	404055	BOLT M6X25	BOLT M6X25 - F24.4

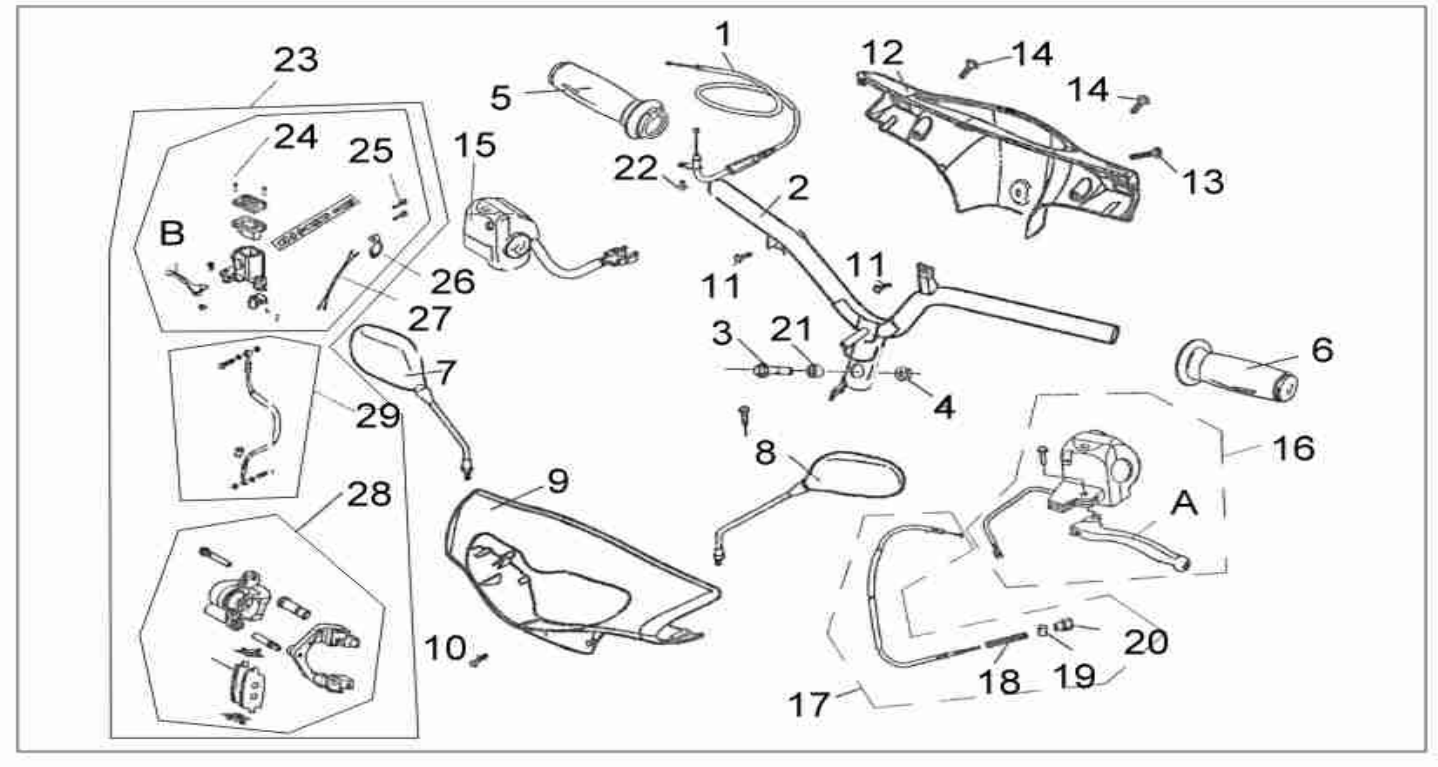
1
2
3
4
5
6
7
8
9
10
11
11
12
13
14
14
15
16
17
18
19
20
21
22
23
24
25
26
27
28
29
A
B

POS	QTY	PARTNUMBER	BESKRIVELSE	DESCRIPTION
1	1	404056	GASKABEL KOMPLET	THROTTLE CABLE ASSY - F26.1
2	1	404057	STYR	STEER - F26.2
3	1	90102944	STÅLBOLT MED SKAFT 10X50	BOLT M10X50
4	1	90100693	LÅSEMØTRIK M10	LOCKNUT M10
5	1	404060	HÅNDTAG HØJRE	GRIP THROTTLE - F26.5
6	1	404061	HÅNDTAG VENSTRE	LEFT GRIP - F26.6
7	1	404062	SIDESPEJL HØJRE	MIRROR RIGHT - F26.7
8	1	404063	SIDESPEJL VENSTRE	MIRROR LEFT - F26.8
9	1	404064	PANEL FORLYGTE SORT	FRONT HEAD COVER BLACK
10	1	404067	BOLT M5X25	BOLT M5X25 - F26.10
11	2	404068	SKRUE ST4.8X16	SCREWST4.8X16 - F26.11
12	1	404069	PANEL VED STYR, BAGERST	REAR PART, HEAD COVER - F26.12
13	1	404070	BOLT	BOLT - F26.13
14	2	404071	SKRUE ST4.2X12	SCREWST4.2X12 - F26.14
15	1	404072	KONTAKTKONSOL HØJRE	SWITCH ASSY RIGHT - F26.15
16	1	404073	KONTAKTKONSOL VENSTRE	SWITCH ASSY LEFT - F26.16
17	1	404074	BREMSEKABEL BAG KOMPLET	BRAKECABLE REAR ASSY - F26.17
21	1	404075	STYRESKIVE	GUIDE WASHER - F26.21
22	1	404076	BOLT M5X10	BOLT M5X10 - F26.22
24	1	404077	BREMSE CYLINDER	MASTER CYLINDER ASSY - F26.24
25	2	404078	BOLT M6X22	BOLT M6X22 - F26.25
26	1	404079	BESLAG	BRACKET - F26.26
27	1	404080	LEDNING	STOP HARNESS - F26.27
28	1	404081	BREMSEKALIBER	BRAKECALIBER ASSY - F26.28
29	1	404082	BREMSE SLANGE	BRAKE HOSE ASSY - F26.29
A	1	404083A	HÅNDTAG, BREMSE HØJRE BLANKT	R.BRAKE HANDLE SILVER - F26.A
B	1	404084A	HÅNDTAG, BREMSE VENSTRE BLANK	L. BRAKE HANDLE SILVER F26.B
C	1	404085	BREMSEKLODS SÆT	BRAKE SHOE ASSY - F26.C

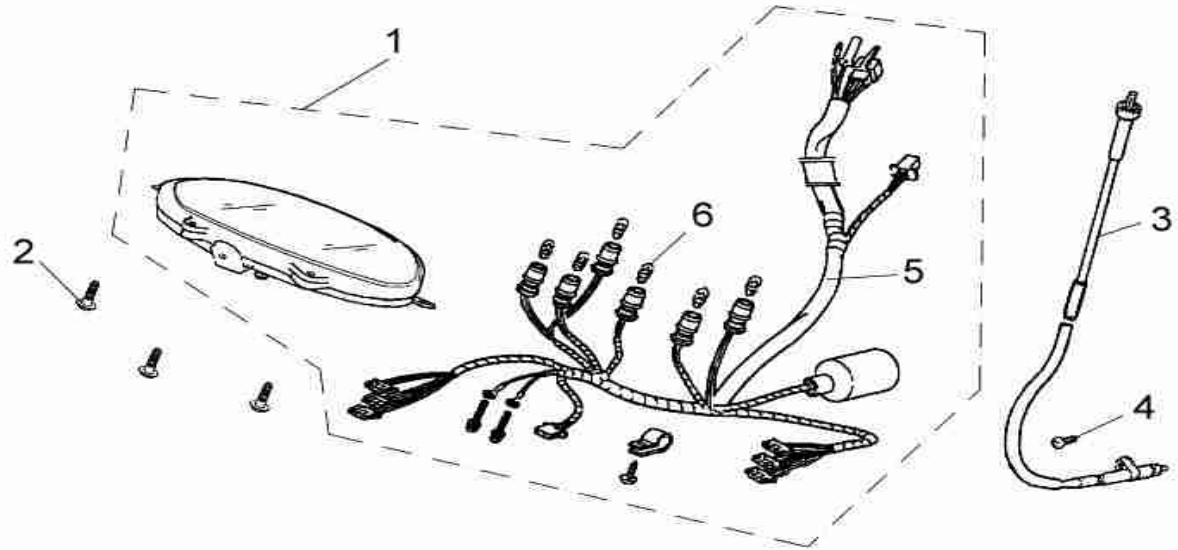
1
2
3
4
5
6

POS	QTY	PARTNUMBER	BESKRIVELSE	DESCRIPTION
1	1	404086	INSTRUMENTPANEL	METER ASSY FREE 50-4-F27.1
2	3	404087	SKRUE ST4.8X16	SCREW ST4.8X16 - F27.2
3	1	404088	SPEEDOMETER KABEL	SDPEEDOMETER CABLE - F27.3
4	1	404089	BOLT M5X16	BOLT M5X16 - F27.4
5	1	404090	LEDNINGSNET	WIREHARNESS - F27.5
6	6	401301	PÆRE 12V 4W	

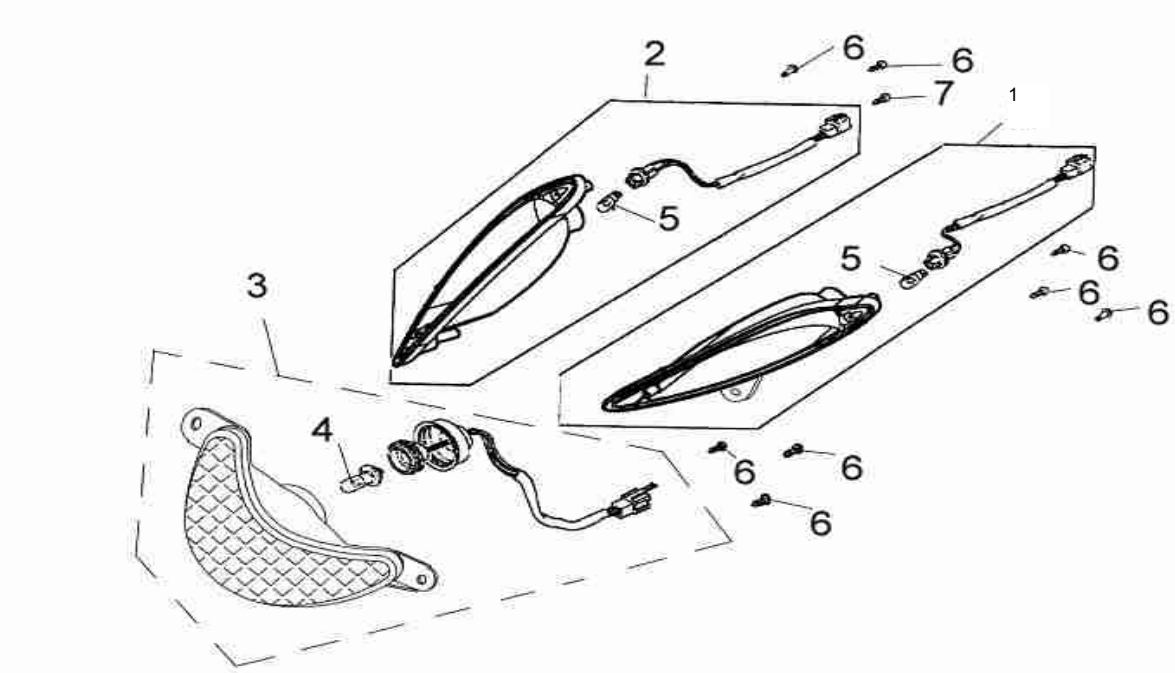
2
6
6
7
1
5
5
6
6
6
3
4
6
6
6

POS	QTY	PARTNUMBER	BESKRIVELSE	DESCRIPTION
1	1	404091	BLINKLYS FOR VENSTRE GUL	INDICATOR FRONT RIGHT YELLOW - F28.1
1	1	404091A	BLINKLYS FOR VENSTRE HVID	INDICATOR FRONT RIGHT WHITE - F28.1
2	1	404092	BLINKLYS FOR HØJRE GUL	INDICATOR FRONT LEFT YELLOW - F28.2
2	1	404092A	BLINKLYS FOR HØJRE HVID	INDICATOR FRONT LEFT WHITE - F28.2
3	1	404093	POSITIONSLYGTE	HEAD LIGHT - F28.3
4	1	401306	PÆRE 12V 5W NETTOPRIS	BULB 12V 5W NETPRICE
5	2	700529	PÆRE 12V 10W	BULB 12V 10W
6	9	404094	SKRUE ST4.2X12	SCREW ST4.2X12 - F28.6

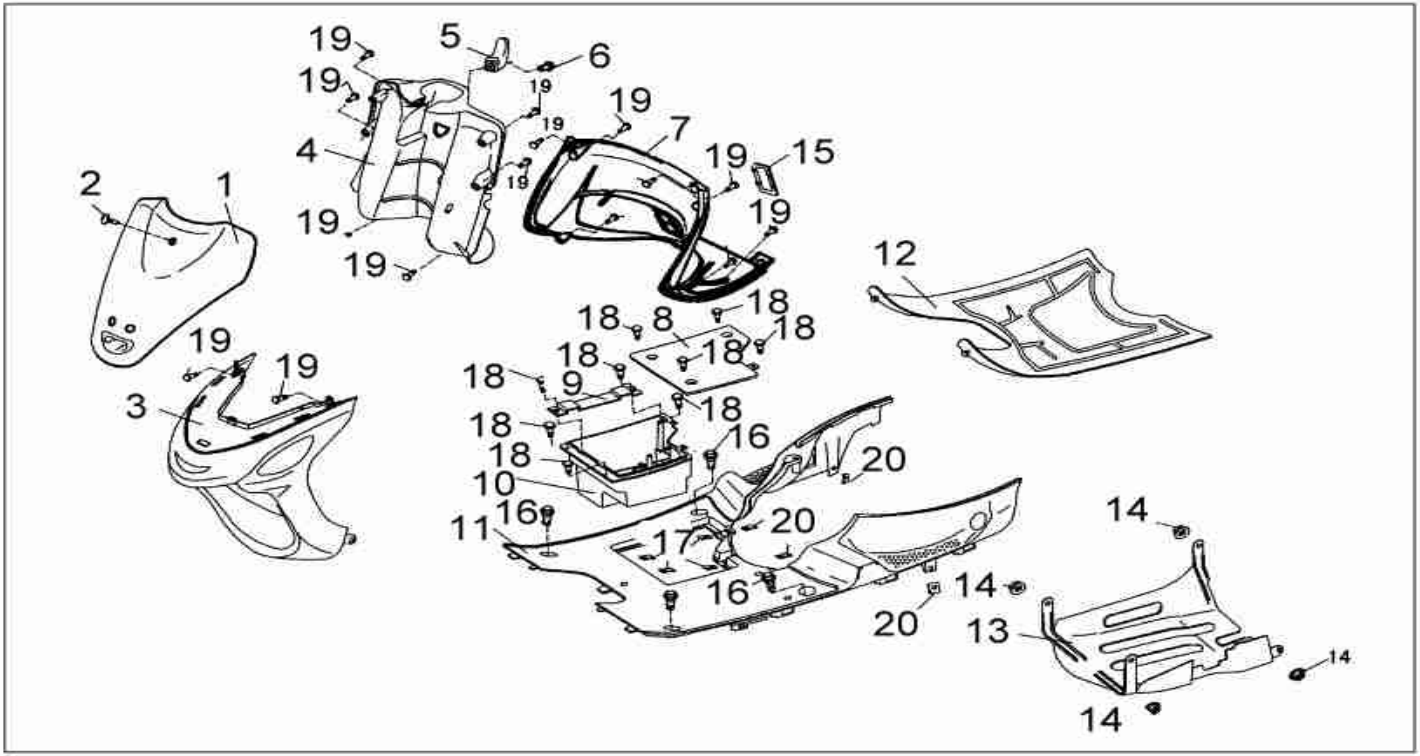

19
5
6
19
19
19
19
7
4
19
15
19
2
1
19
19
19
12
18
8
18
18
18
19
19
18
9
18
3
18
16
18
20
10
16
20
11
17
14
16
14
20
13
14
14

POS	QTY	PARTNUMBER	BESKRIVELSE	DESCRIPTION
1	1	408663	PANEL SORT X30 S30	PANEL
2	1	290464	FLANGEBOLT GUL M6X14	COLLAR BOLT M6X14
3	1	408665	PANEL SØLV S30	PANEL
4	1	404102	PANEL BAG VED STYR	PANEL
5	1	404103	KROG FOR	HOOK
6	1	404104	BOLT M6X12	BOLT M6X12
7	1	404105	OPBEVARINGSRUM FOR	REAR COVER LOWER FRONT - F29.7
8	1	404106	LÅG	LID
9	1	404107	BATTERI HOLDER	BATTERY
10	1	404108	BATTERI BOKS	BATTERY
11	1	404109	BUNDPLADE	BOTTOM PLATE
12	1	402097	BUNDMÅTTE	RUBBER MAT
13	1	404111	BUNDPLADE UNDER	BOTTOM PLATE
14	4	404112	MØTRIK M6	NUT M6
15	1	404113	PLADE FOR STELNUMMER	PLATE
16	4	404114	BOLT M6X20	BOLT M6X20
17	4	404115	KLIPS	CLIP (4.8) - F29.17
18	7	404116	SKRUE ST4.8X16	SCREW
19	16	296028	PLADESKRUE MED SPIDS M4.2X13	PLATE SCREW M4.2X13
20	4	404118	KLIPS	ADAPTER
21	1	404836	TRIN ALUMINIUM	FOOTSTEP ALLOY

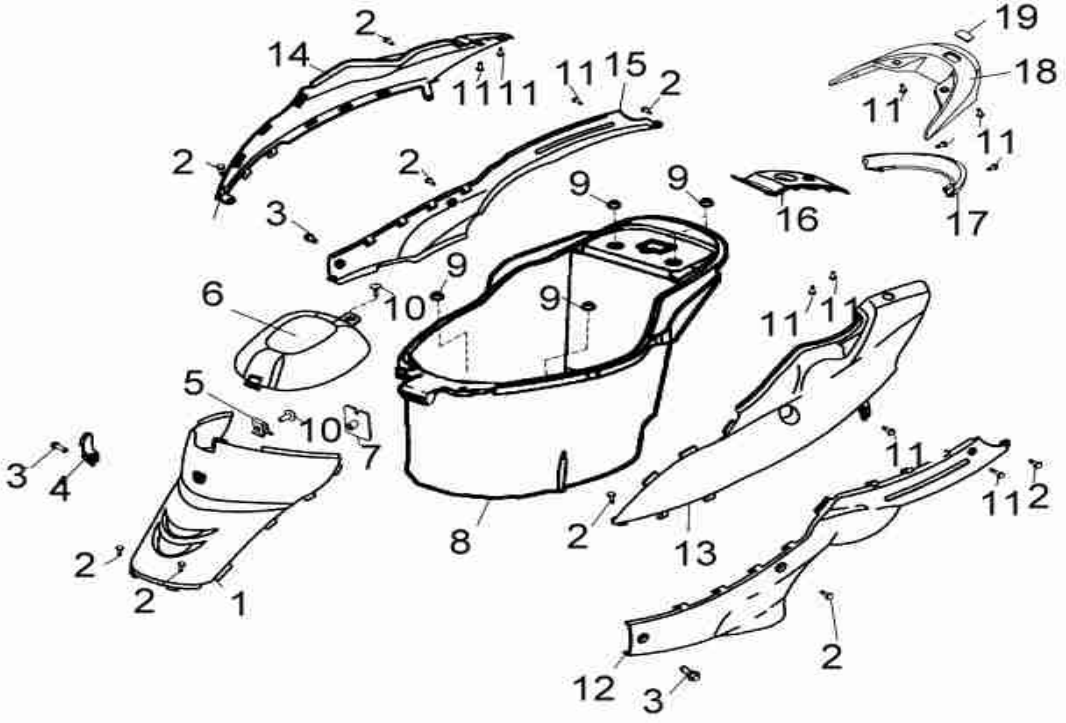
2
14
11
11
11
11
15
2
19
18
11
11
2
2
3
2
9
9
16
17
6
10
9
9
11
11
5
10
7
3
4
2
2
1
8
2
13
11
11
12
2
12
3

POS	QTY	PARTNUMBER	BESKRIVELSE	DESCRIPTION
1	1	404119	PANEL UNDER SÆDE FOR	COVER UNDER SEAT FRONT - F30.1
2	10	296039	PLADESKRUE M4,8X16 SPIDS	SCREW M4,8X16
3	3	404121	FLANGEBOLT M6X12	FLANGEBOLT M6X12 - F30.3
4	1	404122	KROG BAG	HOOK REAR F30.4
5	1	404123	SKRUE KLEMME	CLIP NUT - F30.5
6	1	404124	DÆKSEL FOR MOTOR	COVER FOR ENGINE - F30.6
7	1	404125	BESLAG	BRACKET FOR HOOK - F30.7
8	1	404126	SÆDEBRØND	SEAT INNER - F30.8
9	4	404127	MØTRIK M6	NUT M6 - F30.9
10	2	404128	BOLT	BOLT - F30.10
11	10	296028	PLADESKRUE M4,2X13 SPIDS	SCREW M4,2X13
12	1	408667	PANEL V.N. S30 SØLV	COVER LOWER SILVER (L)
13	1	408669	PANEL V.Ø. S30 SORT	COVER UPPER S30 (L)
14	1	408671	PANEL H.Ø. S30 SORT	COVER UPPER S30 (R)
15	1	408673	PANEL H.N. S30 SØLV	COVER LOWER SILVER (R)
16	1	404144	PANEL VED TANK SORT	COVER FUELTANK BLACK FREE 50-4 - F30.16
17	1	404147	PANEL BAGLYGTE SORT	COVER TAILLAMP BLACK FREE 50-4- F30.17
17	1	404149	PANEL BAGLYGTE SØLV	COVER TAILLAMP SILVER FREE 50-4 F30.17
18	1	404150	PANEL BAGAGEBÆRER SORT FREE 50-4	COVER TAIL SUPPORT BLACK FREE50-4 F30.18
19	1	404153	INDSTIK SORT	INSERT COVER BLACK FREE 50-4 - F30.19B

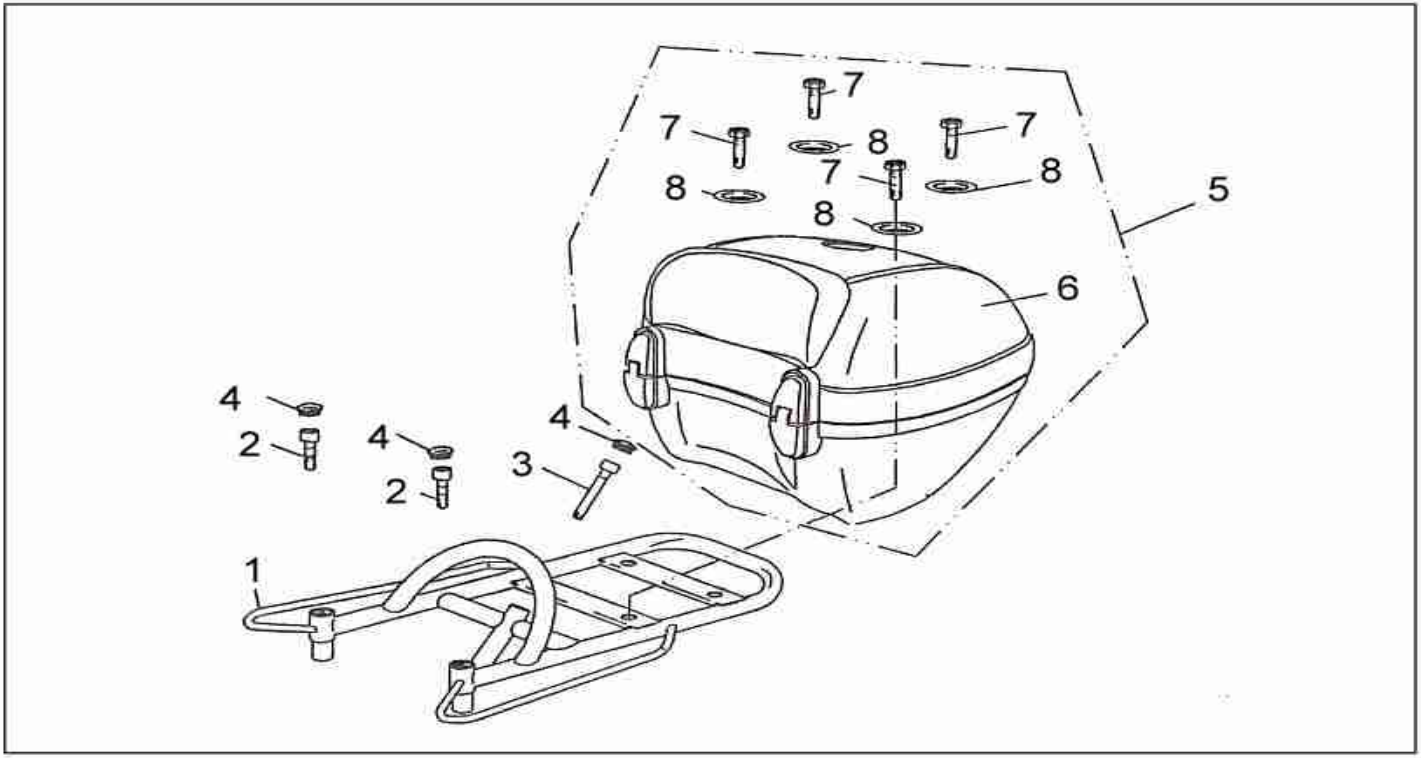
7
7
8
7
7
8
8
8
5
6
4
2
4
2
4
3
1

POS	QTY	PARTNUMBER	BESKRIVELSE	DESCRIPTION
1	1	404156	STØTTE BAG	CARRIER ASSY - F31.1
2	2	404157	BOLT M8X45	BOLT M8X45 - F31.2
3	1	404158	BOLT M8X85	BOLT M8X85 - F31.3
4	3	404159	GUMMIPAKNING	GASKET - F31.4
6	1	403779	BAGAGEBOKS SORT FREE50-4	LUGGAGEBOKS BLACK FREE50-4 - F31.6
6	1	403780	BAGAGEBOKS RØD FREE50-4	LUGGAGEBOKS RED FREE50-4 - F31.6
6	1	403781	BAGAGEBOKS BLÅ FLASH30-4	LUGGAGEBOX BLUE FLASH30-4-F31.6
7	3	404160	BOLT M8X40	BOLT M8X40 - F31.7
8	3	404161	SKIVE	WASHER - F31.8

A

B

C

F

D

E

G

Pos	Antal	Varenummer	Beskrivelse	Description
A	1	409059	Lås med nøgle	Lock with key
B	1	409060	Lygteglas	Lens
C	1	409061	Måtte	Mat
D	1	409062	Ryglæn	Support
E	1	409063	Plade	Plate
F	1	409064	Dæksel	Cover
G	1	409065	Monteringssæt	Mounting assy
	1	404833	Bagagaboks komplet Blå	Luggagebox assy Blue
	1	404831	Bagagaboks komplet Rød	Luggagebox assy Red
	1	404832	Bagagaboks komplet Sort	Luggagebox assy Black

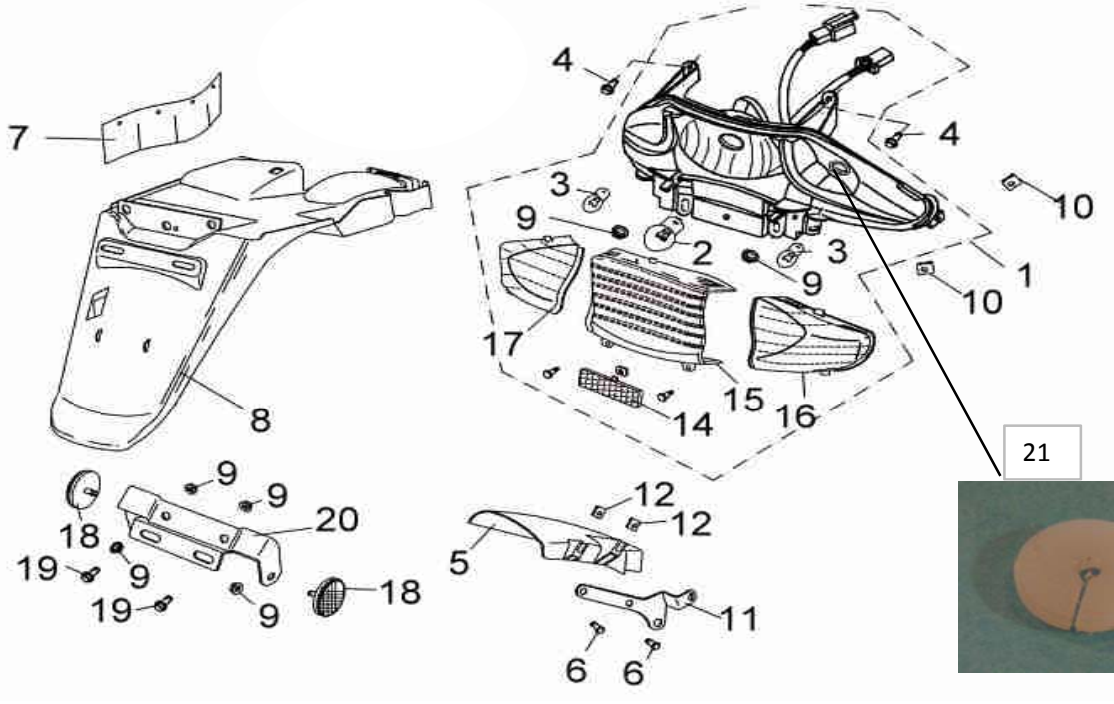
7
8
4
4
3
9
2
3
9
10
1
10
17
15
16
14
9
9
20
18
19
9
19
9
18
12
12
5
11
6
6
21

POS	QTY	PARTNUMBER	BESKRIVELSE	DESCRIPTION
1	1	404162	BAGLYGTE KPL KLAR GLAS	REAR LIGHT ASSY CLEAR - F32.1
2	1	700530	PÆRE 12V 21/5W	BULB 12V 21/5W
3	2	700529	PÆRE 12V 10W	BULB 12V 10W
4	2	404163	BOLT M6X12	BOLT M6X12 - F32.4
5	1	404164	LILLE SKÆRM	SMALL FENDER - F32.5
6	2	404165	BOLT M5X12	BOLT M5X12 - F32.6
7	1	404166	GUMMI	RUBBER - F32.7
8	1	404167	BAGSKÆRM	REAR FENDER - F32.8
9	6	404168	MØTRIK M6	NUT M6 - F32.9
10	4	404169	KLIPS	CLIP (4.2) - F32.10
11	1	404170	BESLAG	FENDER FRAME - F32.11
12	2	404171	MØTRIK	NUT CLIP - F32.12
14	1	404173	REFLEKS	REAR REFLECT - F32.14
15	1	404174	BAGLYGTE GLAS	COVER TAIL LAMP RED - F32.15
16	1	404175	BLINKLYGTE GLAS, BAG, KLAR HØJRE	TURN COVER RIGHT CLEAR - F32.16
17	1	404176	BLINKLYGTE GLAS, BAG, KLAR VENSTRE	TURN COVER LEFT CLEAR - F32.17
18	2	404177	REFLEKS	REFLECT - F32.18
19	2	404178	BOLT M6X16	BOLT M6X16 - F32.19
20	1	404179	MONTERINGSSTYKKE	ASSEMBLING FRAME - F32.20
21	1	408017	SKIVE FOR FATNING	WASHER

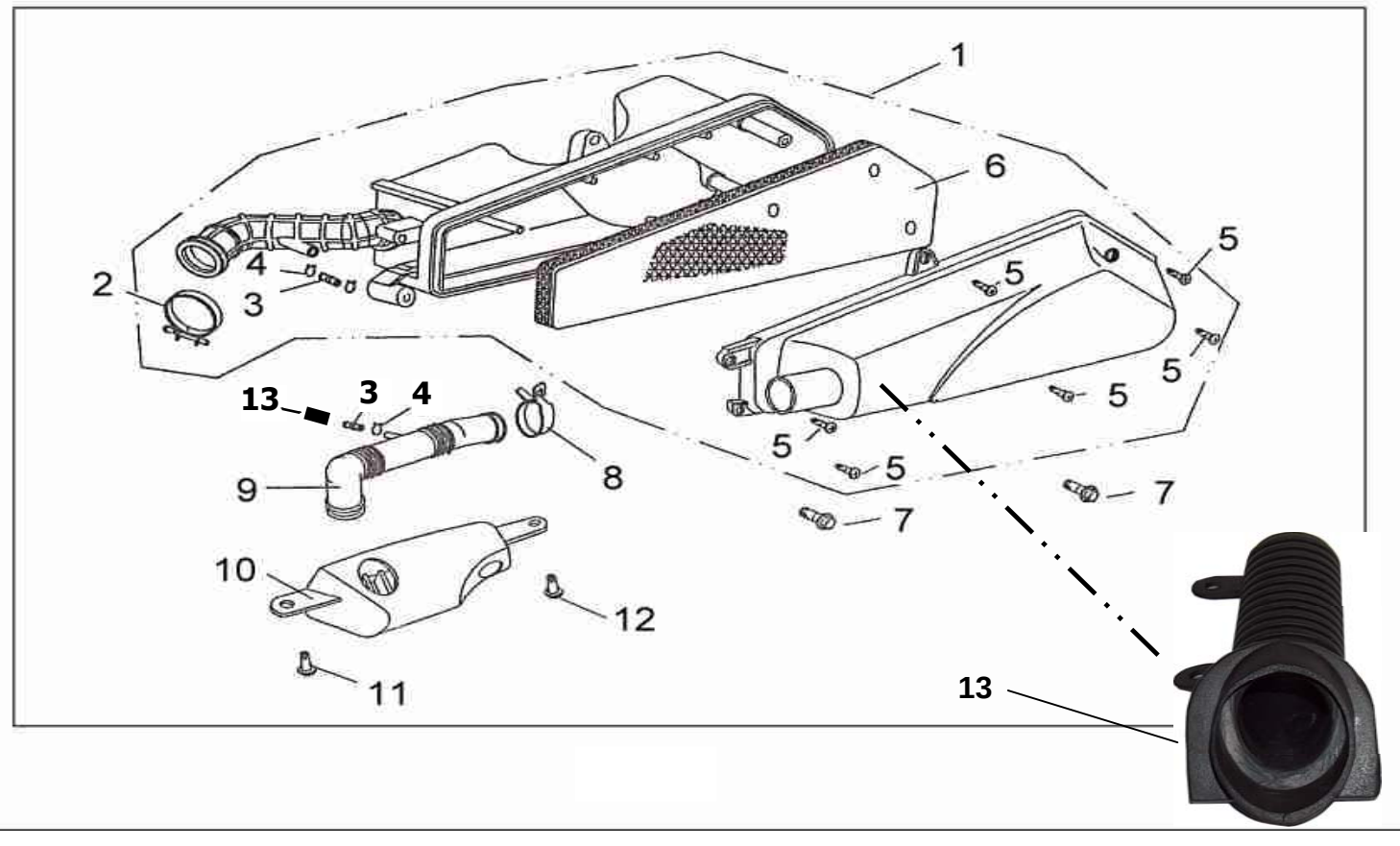
1
2
3
4
5
6
7
8
9
10
11
12
13

POS	QTY	PARTNUMBER	BESKRIVELSE	DESCRIPTION
1	1	404180	LUFTFILTER KPL	AIR CLEAN ASSY - F33.1
2	1	404181	SPÆNDEBÅND	CLIP, TUBE - F33.2
3	2	404182	RØR	TUBE - F33.3
4	2	404183	KLIPS	CLIP, TUBE (A) - F33.4
5	6	404184	SKRUE ST4.8X19	SCREW ST4.8X19 - F33.5
6	1	404185	LUFTFILTER ELEMENT	AIR FILER FOAM - F33.6
7	2	404186	BOLT M6X30	BOLT M6X30 - F33.7
8	1	404187	SPÆNDEBÅND	CLIP, TUBE - F33.8
9	1	404188	RØR MED VENTIL	INLET TUBE - F33.9
10	1	404189	LUFT RØR	AIR TUBE - F33.10
11	2	404190	SKRUE ST4.2X12	SCREW ST4.2X12 - F33.11
13	1	404182A	PROP/VENTIL	PLUG / VALVE

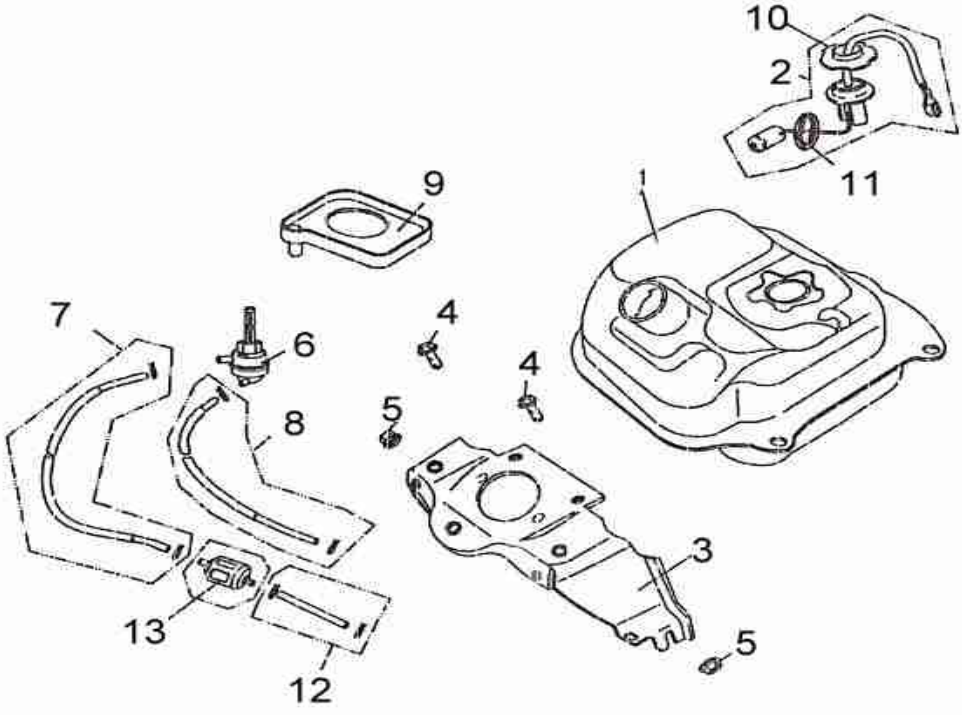
10
2
11
9
1
7
6
4
4
8
5
3
5
13
12

POS	QTY	PARTNUMBER	BESKRIVELSE	DESCRIPTION
1	1	700312	TANK	TANK
2	1	404192	BRÆNDSTOFMÅLER	FUEL METER - F34.2
3	1	404193	BESLAG	TAIL TANKBRACKET ASSY - F34.3
4	2	404194	BOLT M6X12	BOLT M6X12 - F34.4
5	2	404195	MØTRIK M6	NUT M6 - F34.5
6	1	404196	BENZINHANE	FUELVALVE - F34.6
7	1	404197	BENZINSLANGE	FUEL TUBE A - F34.7
8	1	404198	VAKUMSKLANGE	TUBE VACUUM - F34.8
9	1	404199	GUMMI	RUBBER - F34.9
10	1	404200	MØTRIK	NUT, FUELMETER - F34.10
11	1	404201	GUMMIPAKNIING	RUBBER GASKET - F34.11
12	1	404202	BENZINSLANGE B	FUEL TUBE B - F34.12
13	1	401123	BENZINFILTER	FUELFILTER

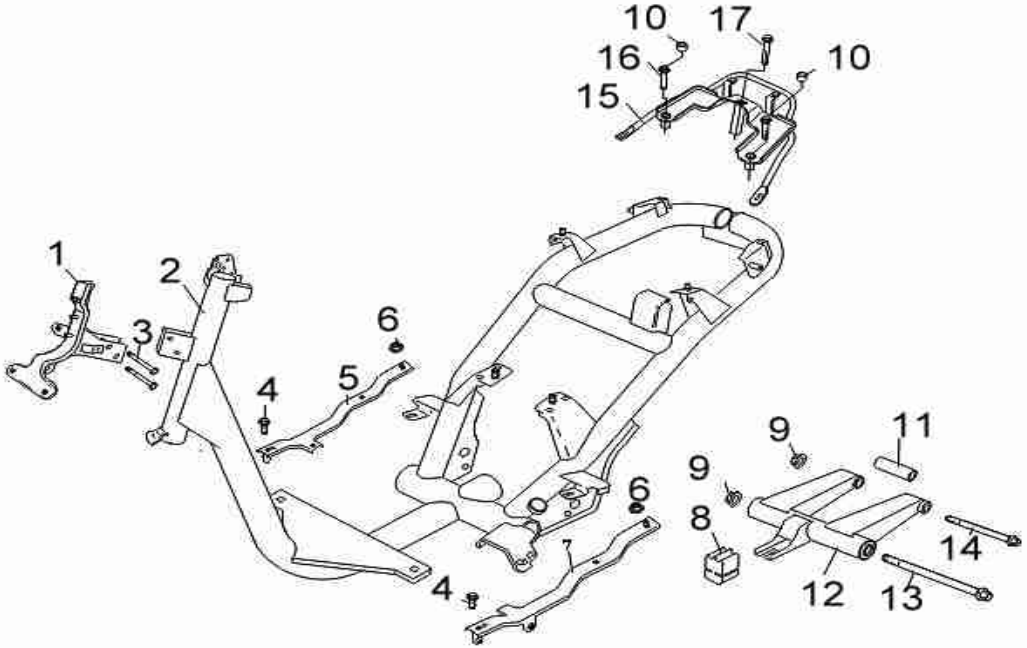
10
17
16
10
15
1
2
3
6
4
5
6
9
11
9
8
14
12
13
4

POS	QTY	PARTNUMBER	BESKRIVELSE	DESCRIPTION
1	1	404203	MONTERINGSBESLAG FOR	FRONT BRACKET ASSY - F35.1
2	1	404204	CHASSIS	CHASSIS - F35.2
3	2	404205	BOLT M6X30	BOLT, FLANGE M6X30 - F35.3
4	2	404206	BOLT M6X12	BOLT M6X12 - F35.4
5	1	404207	MONTERINGSBESLAG HØJRE	RIGHT BRACKET ASSY - F35.5
6	2	404208	MØTRIK M6	NUT M6 - F35.6
7	1	404209	MONTERINGSBESLAG VENSTRE	LEFT BRACKET ASSY - F35.7
8	1	404210	GUMMIDÆMPER	RUBBER CUSHION - F35.8
9	2	404211	MØTRIK M10X1.25	NUT M10X1.25 - F35.9
10	2	404212	GUMMIHÆTTE	DUST COVER - F35.10
11	1	404213	BØS	BUSH - F35.11
12	1	404214	BAGSVING	REAR FRAME WELDING - F35.12
13	1	404215	AKSEL	REAR FRAME SHAFT - F35.13
14	1	404216	AKSEL FOR MOTOR	ENGINE SHAFT - F35.14
15	1	404217	MONTERINGSBESLAG	TAIL BRACKET ASSY - F35.15
16	2	404218	BOLT M8X45	BOLT M8X45 - F35.16
17	1	404219	BOLT M8X85	BOLT M8X85 - F35.17

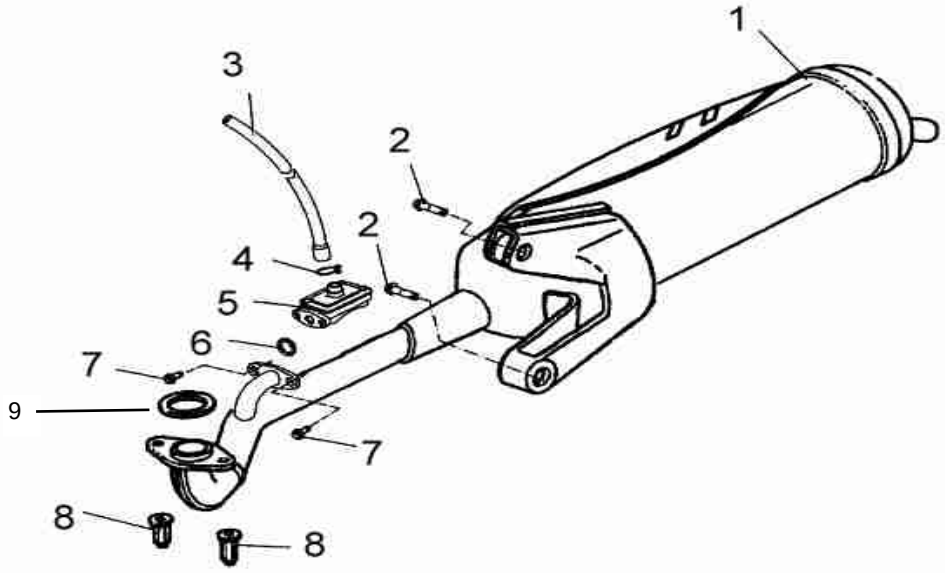
1
3
2
2
4
5
6
7
9
7
8
8

POS	QTY	PARTNUMBER	BESKRIVELSE	DESCRIPTION
1	1	404221	UDSTØDNING KOMPLET ALU	MUFFLER WELDING ASSY ALU - F36.1
2	2	404222	BOLT M8X35	BOLT M8X35 - F36.2
3-4	1	404223	SLANGE MED KLEMME	TUBU WITH CLAMP - F36.3-4
5	1	404224	VENTIL	VALVE - F36.5
6	1	404225	SKIVE	WASHER - F36.6
7	2	404226	BOLT M6X12	BOLT M6X12 - F36.7
8	2	404227	TOPMØTRIK	TOP NUT - F36.8
9	1	404220A	UDSTØDNINGSPAKNING	GASKET EXHAUST

1

2

Pos	Vare nr. / Part no.	Qty	Beskrivelse	Description
1	404221	1	Udstødning Aluminium	Exhaust Aluminum
2	404220	1	Udstødning Sort	Exhaust Black

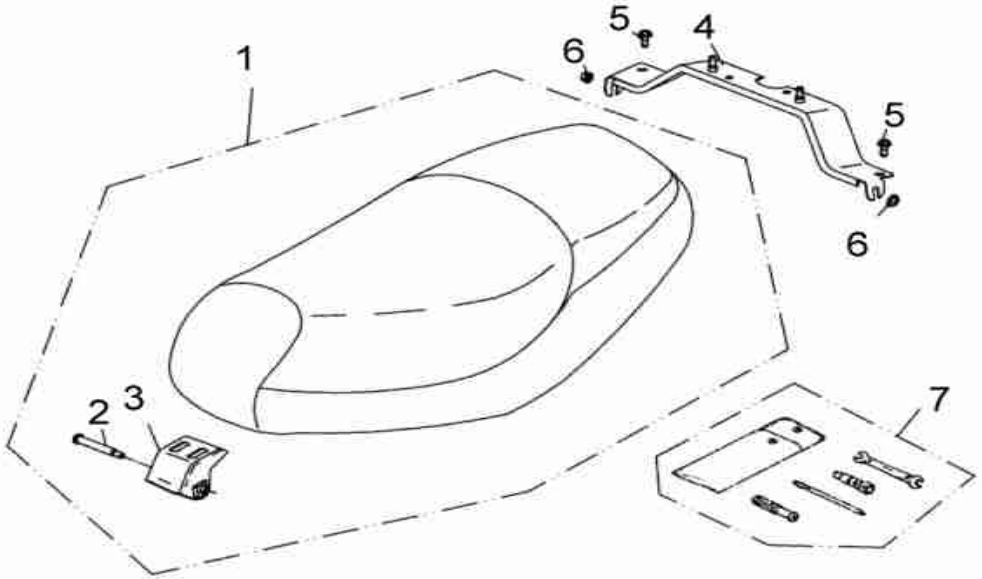
1
2
3
4
5
6
5
6
7

POS	QTY	PARTNUMBER	BESKRIVELSE	DESCRIPTION
1-3	1	404228	SÆDE MED BESLAG	SEAT ASSY - F37.1-3
4	1	404229	BESLAG	FRAME - F37.4
5	2	404230	BOLT M6X12	BOLT M6X12 - F37.5
6	2	404231	MØTRIK M6	NUT M6 - F37.6

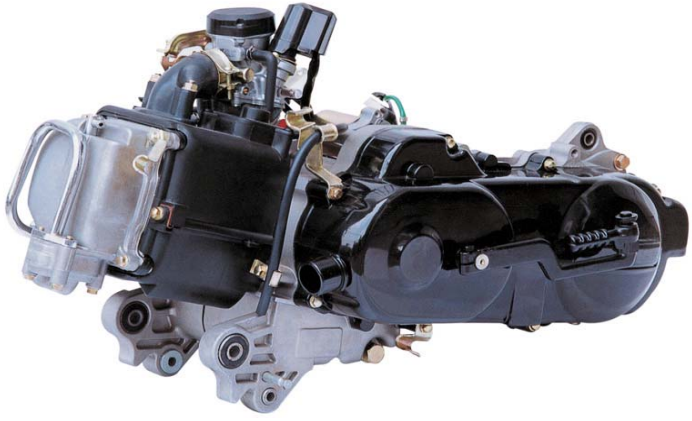

Pos	Vare nr. / Part no.	Qty	Beskrivelse	Description
1	407616	1	Motor 45 KM - Uden karburator	Engine 45 KM - W/O carburetor
1	407617	1	Motor 30 KM - Uden karburator	Engine 30 KM - W/O carburetor

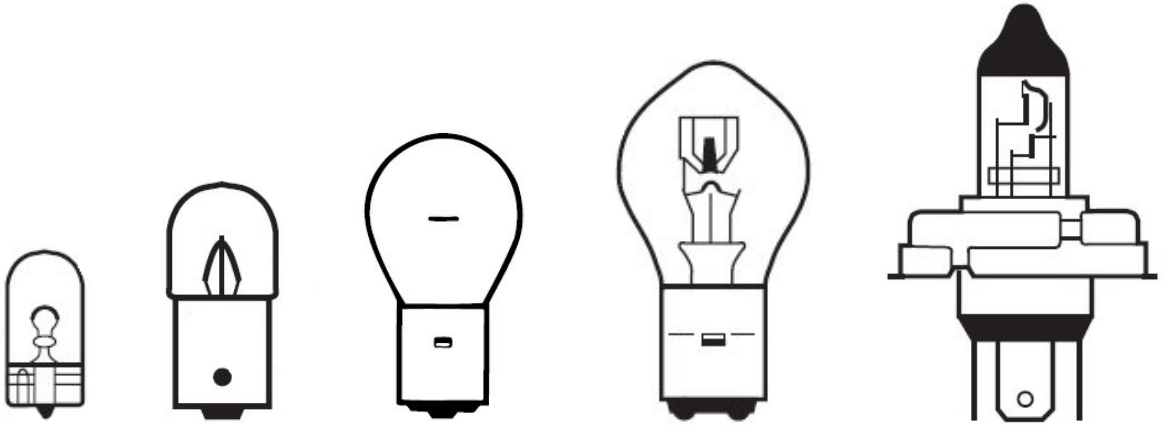

Texas Free 50-4 **Texas Flash 30-4**	**Størrelse**	**Varenummer**
Parkeringslys		
Forlygte	12V / 35/35W	401305
Baglygte	12V / 21/5W	700530
Blinklys - hvid pære	12V / 10W	700529
Blinklys - gul pære	12V / 10W	401303

Free Flash Speedy

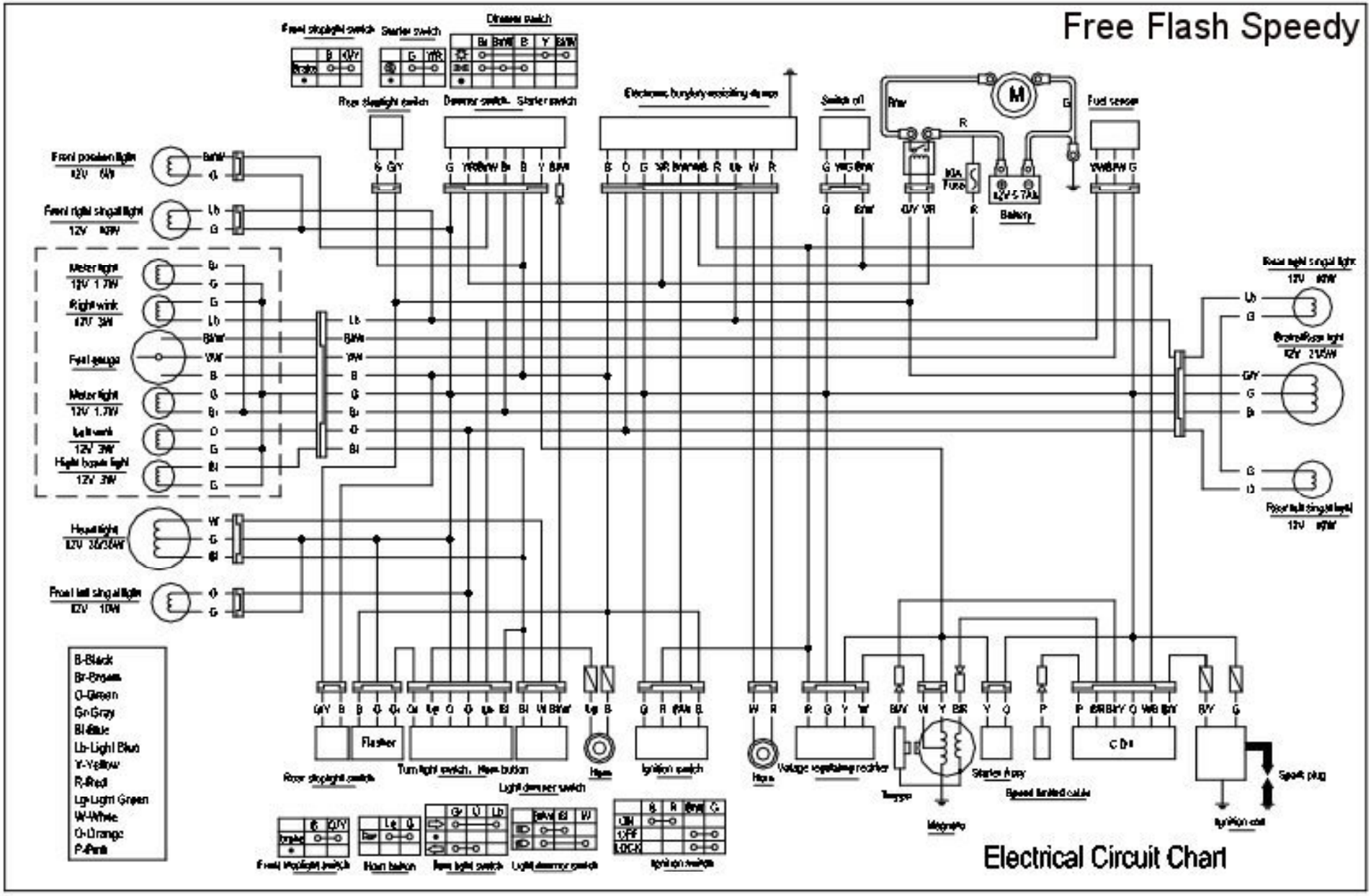

Electrical Circuit Chart